# Conversion Tables, Formulas and Suggested Guidelines for Horticultural Use



THE UNIVERSITY OF GEORGIA
COOPERATIVE EXTENSION

College of Agricultural and Environmental Sciences
College of Family and Consumer Sciences

# Table of Contents


**Table No.** **Page**

1. Equivalents for liquid measure (volume) . . . 3
2. Equivalents for dry measure and weight . . . 4
3. Metric system conversion table . . . 5
4. Dilution of liquid pesticides at various concentrations . . . 5
5. Equivalent quantities of dry materials (wettable powders) for various volumes of water based on recommended pounds per 100 gallons . . . 6
6. Equivalent quantities of liquid materials (emulsion concentrates, etc.) for various volumes of water based on pints per 100 gallons . . . 6
7. Rate of application equivalent table . . . 7
8. Fertilizer conversions for specified square feet and row areas . . . 8
9. Fertilizer weight as measured by standard pot size . . . 9
10. Element concentrations for pounds soluble fertilizer in 1000 gallons (U.S.) water . . . 10
11. Injection ratios and nitrogen concentrations for constant fertilization . . . 11
12. Injector calibration with a conductivity meter . . . 12
    A. Peters Single Element Fertilizer Components. . . . 12
    B. Peters Mixed Soluble Fertilizer Analysis. . . . 13
13. Parts per million of desired nutrient to ounces of fertilizer carrier in 100 gallons of water15 (or grams in 1 liter) and vice versa . . . 14
14. Conversion factors among electrical conductivity (EC) units . . . 15
15. Various acids to add to irrigation water for acidification . . . 16
16. Amounts of nutrient sources to combine in making various fertilizer formulas . . . 17
17. Formulas for additional fertilizer calculations . . . 18
18. Miscellaneous conversions used in fertilizer calculations . . . 19
19. Osmocote® controlled-release fertilizers and their release periods . . . 20
20. Rates in $lb/yd^3$ ($kg/m^3$) for incorporation of three of the most popular formulations of Nutricote into greenhouse root substrates . . . 21
21. Materials, rates necessary to lower the pH level of greenhouse potting substrate 0.5 to 1.0 units . . 21
22. Approximate amount of materials required to change pH of potting mixes . . . 22
23. Dilution/conversion chart for various chemical growth regulators . . . 22
24. Pre-plant fertilizer sources and rates of application . . . 26
25. Cornell Peat-lite Mix A for seedlings, bedding plants and potted plants . . . 27
26. Number of pots per bushel and per cubic yard of soil mix . . . 28
27. Number of nursery containers that can be filled from 1 $yd^3$ of soil mix . . . 29
28. Coverage estimates for perlite, peat, topsoil and straw . . . 29
29. Plant spacing guide (greenhouse) . . . 30
30. Plant spacing guide (field/orchard) . . . 30

**Landscape**

31. Estimated number of plants to fill 100 ft2 bed area for square (row) and triangular (equilateral) planting patterns using 4 to 14 inch spacing distances . . . 31
32. Number of bedding/groundcover plants required at various spacing for landscape planting . . .
33. Number of plants per acre at various spacings . . . 32
34. Times required to mow or trim lawn areas . . . 33
35. Volume of water delivered - by size of hose . . . 34
36. Cubic yards of soil needed at various depths and areas . . . 34
37. Areas covered in square feet at various depths . . . 35
38. Temperature conversion . . . 35

**Figure No.** **Page**

1A-C. Formulas for calculating greenhouse volume . . . 36
2A-C. Formulas for calculating variously-shaped areas . . . 37

# Conversion Tables, Formulas and Suggested Guidelines for Horticultural Use

*Bodie V. Pennisi, Gary L. Wade, Melvin P. Garber,*
*Paul A. Thomas and James T. Midcap*
*Horticulture Department*

Pesticide and fertilizer recommendations often are made on a pounds-per-acre or tons-per-acre basis for field production. However, greenhouse and nursery operators, landscape professionals and orchardists often must convert these recommendations to smaller areas, such as row feet or square feet per tree or per pot. Pints, cups, ounces, tablespoons and teaspoons often are the common units of measure. Metric units of measure can further complicate conversion.

This publication is designed to help growers make these calculations and conversions and to provide other data useful in the management, planning and operation of horticultural enterprises. A number of formulas for calculating fertilizer application rates on a parts-per-million basis are given. Tables for fertilizer injector calibration using a conductivity meter, as well as pre-plant application rates for various soil mix components and amendments, also are provided. A brief explanation of how each table is used is provided.

**Tables 1 through 3** help determine equivalent measures for liquid (volume) or dry (weight) chemical substances and also converting metric to English units.

**Table 1. Equivalents for liquid measure (volume)**

| Gallons | Quarts | Pints | Fluid Ounces | Cupfuls | Tablespoonful | Teaspoonful | Milliliters | Liters |
|---|---|---|---|---|---|---|---|---|
| 1 | 4 | 8 | 128 | 16 | 256 | 768 | 3785 | 3.785 |
| - | 1 | 2 | 32 | 4 | 64 | 192 | 946 | 0.946 |
| - | - | 1 | 16 | 2 | 32 | 96 | 473 | 0.473 |
| - | - | - | 1 | ⅛ | 2 | 6 | 30 | 0.030 |
| - | - | - | - | 1 | 16 | 48 | 236 | 0.236 |
| - | - | - | - | - | 1 | 3 | 15 | 0.015 |
| - | - | - | - | - | - | 1 | 5 | 0.005 |
| - | - | - | - | - | - | - | 1 | 0.001 |

**Table 2. Equivalents for dry measure and weight**

**Dry measure**

| | |
|---|---|
| 3 level teaspoonfuls ..... ..... ..... ..... | = 1 level tablespoonful |
| 16 level tablespoonfuls ..... ..... ..... | = 1 cupful |
| 2 cupfuls ..... ..... ..... ..... ..... ..... | = 1 pint |
| 2 pints ..... ..... ..... ..... ..... ..... ..... | = 1 quart |

**Weight**

| Pounds/Ounces | Metric |
|---|---|
| 220.46 pounds | 100 kilograms (kg) |
| 100 pounds | 45.349 kilograms |
| 2.204 pounds | 1 kilogram |
| 1.102 pounds | 500 grams (g) |
| 1 pound/16 ounces | 453.5900 grams |
| 8 ounces | 226.78 grams |
| 4 ounces | 113.39 grams |
| 3.527 ounces | 110 grams |
| 2 ounces | 56.70 grams |
| 1 ounce | 28.35 grams |
| 3/4 ounce | 21.25 grams |
| 1/2 ounce | 14.17 grams |
| 1/4 ounce | 7.08 grams |
| 1/8 ounce | 3.54 grams |
| 1/16 ounce | 1.77 grams |
| 1/32 ounce | 885 milligrams |
| 1/64 ounce | 442 milligrams |
| 1/128 ounce .. | 221 milligrams |

**Ounces-to-Grams**

| Ounces | Grams |
|---|---|
| 3/8 | 10.631 |
| 1/2 | 14.75 |
| 5/8 | 17.718 |
| 3/4 | 21.162 |
| 7/8 | 24.805 |
| 1 .. | 28.349 |
| 2. | 56.698 |
| 1/256 | 0.111 |
| 1/128 | 0.221 |
| 1/64 | 0.443 |
| 1/32 | 0.886 |
| 1/16 | 1.772 |
| 1/8 | 3.544 |
| 1/4 | 7.087 |

**Table 3. Metric system conversion table**

| | |
|---|---|
| **Liquid capacity** | |
| 1 fluid ounce (fl oz) = | 30 milliliters (ml) |
| 1 pint (pt) = 16 fl oz = | 473 ml |
| 1 quart (qt) = | 946 ml |
| 1 gallon (gal) = | 3,785 ml |
| 1 liter = | 1,000 ml |
| 1 milliliter (ml) = | 1 cubic centimeter (cc) |
| **Dry material capacity** | |
| 1 ounce (avoirdupois) = | 28.4 grams (g) |
| 1 pound (lb) = | 453.6 g |
| 1 kilogram (kg) = | 1,000 g = 2.2 lb |
| **Volume** | |
| 1 cubic inch ($in^3$) = | 16.4 milliliters (ml) |
| 1 cubic foot ($ft^3$) = | 7.48 gal = 28.3 liters (l) |
| 1 bushel (bu) = | 1.24 $ft^3$ = 35.2 liters |
| 1 cubic yard ($yd^3$) = | 21.7 bu = 765 liters |
| **Linear** | |
| 1 inch (in) = | 2.54 centimeters (cm) |
| 1 foot (ft) = | 30.48 cm |
| 1 yard (yd) = | 91.44 cm |
| 1 meter (m) = | 100 cm |
| **Area** | |
| 1 square inch ($in^2$) = | 6.45 square centimeters ($cm^2$) |
| 1 square foot ($ft^2$) = | 0.09 square meter ($m^2$) |
| 1 square yard ($yd^2$) = | 0.84 square meter ($m^2$) |
| 1 acre (a) = | 0.40 hectare (ha) |
| 1 square mile ($M^2$) = | 2.59 square kilometer ($km^2$) |

**Tables 4 through 7** help determine correct application rates for various pesticides.

**Table 4. Dilution of liquid pesticides at various concentrations**

| | Amount Desired | | | |
|---|---|---|---|---|
| **Dilution** | **1 Gal** | **3 Gal** | **Gal** | **5 Gal** |
| 1:100 | 2 tbs + 2 tsp | ½ cup | ¾ cup + 5 tsp | 1 cup + 3 tbs |
| 1:200 | 4 tsp | ¼ cup | 6½ tbs | ½ cup + 2 tbs |
| 1:400 | 2 tsp | 2 tbs | 3 tbs | 4 tbs + 2½ tsp |
| 1:800 | 1 tsp | 1 tbs | 1 tbs + 2 tsp | 3 tbs + 2½ tsp |
| 1:1000 | ¾ tsp | 2¼ tsp | 1 tbs + 1 tsp | 1 pt + ½ cup |

Example: Directions call for a 1:200 dilution. To prepare 3 gal of finished product, you would need to add ¼ cup.

**Table 5. Equivalent quantities of dry materials (wettable powders) for various volumes of water based on recommended pounds per 100 gallons**

| | Recommended Rate | | | | | |
|---|---|---|---|---|---|---|
| **Water** | **1 lb** | **2 lb** | **lb** | **4 lb** | **5 lb** | **6 lb** |
| 50 gal | ½ lb | 1 lb | 1½ lb | 2 lb | 2½ lb | 3 lb |
| 25 gal | 4 oz | 8 oz | 12 oz | 1 lb | 1¼ lb | 1½ lb |
| 12.5 gal | 2 oz | 4 oz | 6 oz | 8 oz | 10 oz | ¾ lb |
| 5 gal | 3 tbs | 1½ oz | 2½ oz | 3¼ oz | 4 oz | 5 oz |
| 1 gal | 1 tsp | 2 tsp | 1 tbs | 4 tsp | 5 tsp | 2 tbs |

Example: Directions for use specify a rate of 4 lb per 100 gal of water. To prepare 1 gal of solution would require 4 tsp of material.

**Table 6. Equivalent quantities of liquid materials (emulsion concentrates, etc.) for various volumes of water based on pints per 100 gallons**

| **Water** | Recommended Rate | | | | | |
|---|---|---|---|---|---|---|
| **100 gal** | **½ pt** | **1 pt** | **2 pt** | **3 pt** | **4 pt** | **5 pt** |
| 50 gals | 4 fl oz | 8 fl oz | 1 pt | 1½ pt | 2 pt | 2½ pt |
| 25 gals | 2 fl oz | 4 fl oz | 8 fl oz | 12 fl oz | 1 pt | 1¼ pt |
| 12.5 gals | 1 fl oz | 2 fl oz | 4 fl oz | 6 fl oz | 8 fl oz | 10 fl oz |
| 5 gals | 1 tbs | 1 fl oz | 2 fl oz | 2½ fl oz | 3 fl oz | 4 fl oz |
| 1 gal | ½ tsp | 1 tsp | 2 tsp | 3 tsp | 4 tsp | 5 tsp |

Example: Directions for use specify a rate of 4 pt per 100 gal of water. To prepare 5 gal of solution would require 3 fl oz of material.

| Table 7. Rate of application equivalent table | | |
|---|---|---|
| **Rate per Acre** | **Rate per 1000 sq ft** | **Rate per 100 sq ft** |
| **LIQUID MATERIALS** | | |
| 1 pt | ¾ tbs | ¼ tsp |
| 1 qt | 1½ tbs | ½ tsp |
| 1 gal | 6 tbs | 2 tsp |
| 25 gal | 4⅔ pt | ½ pt |
| 50 gal | 4⅔ qt | 1 pt |
| 100 gal | 2⅓ gal | 1 qt |
| 200 gal | 4⅔ gal | 2 qt |
| 300 gal | 7 gal | 3 qt |
| 400 gal | 9¼ gal | 1 gal |
| 500 gal | 11½ gal | 1¼ gal |
| **DRY MATERIALS** | | |
| 1 lb | 2½ tsp | ¼ tsp |
| 3 lb | 2¼ tbs | ¾ tsp |
| 4 lb | 3 tbs | 1 tsp |
| 5 lb | 4 tbs | 1¼ tsp |
| 10 lb | ½ cup | 2 tsp |
| 100 lb | 2¼ lb | ¼ lb |
| 200 lb | 4⅔ lb | ½ lb |
| 300 lb | 7 lb | ¾ lb |
| 400 lb | 9¼ lb | 1 lb |
| 500 lb | 11½ lb | 1¼ lb |
| Examples: For liquid materials, 100 gal per acre is equivalent to 2⅓ gal per 1000 $ft^2$ or 1 qt per 100 $ft^2$. For dry materials, 4 lb per acre is equivalent to 3 tbs per 1000 $ft^2$ or 1 tsp per 100 $ft^2$. | | |

**Tables 8 through 9** help determine the correct application rates for fertilizers when nutrition recommendations are based on fertilizer weight.

**Table 8. Fertilizer conversions for specified square feet and row area**

| Material Grouped by Approximate Weight per Pint | Fertilizer Rate for Specific Areas | | | | | Per 10 feet of row spaced** | | |
|---|---|---|---|---|---|---|---|---|
| | Recommended rate per acre* lb | 100 sq ft lb | 1000 sq ft lb | 10 sq ft tbs | 100 sq ft pt | 1 ft tbs | 2 ft tbs | 3 ft cup |
| 10 oz per pint | | | | | | | | |
| Sulfur or | 100 | 0.2 | 2.3 | 1.2 | 0.4 | 1.2 | 2.4 | 0.2 |
| Dried Blood | 500 | 1.2 | 11.5 | 6.0 | 1.9 | 6.0 | 12.0 | 1.1 |
| | 1000 | 2.3 | 23.0 | 12.0 | 3.7 | - | - | -- |
| 13 oz per pint | | | | | | | | |
| Urea or | 100 | 0.2 | 2.3 | 0.9 | 0.3 | 0.9 | 1.8 | 0.2 |
| Ammonium Nitrate or | 500 | 1.2 | 11.5 | 4.5 | 1.4 | 4.5 | 9.0 | 0.8 |
| Ammonium Chloride | 1000 | 2.3 | 23.0 | 9.0 | 2.8 | - | - | - |
| 16 oz per pint | | | | | | | | |
| Ammonium Phosphate or | 100 | 0.2 | 2.3 | 0.7 | 0..2 | 0.7 | 1.4 | 0.1 |
| Potassium Chloride or | 500 | 1.2 | 11.5 | 3.5 | 1.2 | 3.5 | 7.0 | 0.7 |
| Gypsum or | 1000 | 2.3 | 23.0 | 7.0 | 2.3 | - | - | - |
| Mixed Fertilizers | | | | | | | | |
| 19 oz per pint | | | | | | | | |
| Calcium Nitrate or | 100 | 0.2 | 2.3 | 0.6 | 0.2 | 0.6 | 1.2 | 0.1 |
| Ammonium Sulfate or | 500 | 1.2 | 11.5 | 3.0 | 1.0 | 3.0 | 6.0 | 0.6 |
| Superphosphate | 1000 | 2.3 | 23.0 | 6.0 | 2.0 | - | - | - |
| 23 oz per pint | | | | | | | | |
| Ground Limestone or | 100 | 0.2 | 2.3 | 0.5 | 0.2 | 0.5 | 1.0 | 0.1 |
| | 500 | 1.2 | 11.5 | 2.5 | 0.8 | 2.5 | 5.0 | 0.5 |
| Potassium Sulfate | 1000 | 2.3 | 23.0 | 5.0 | 1.6 | - | - | - |
| | 2000 | 4.6 | 46.0 | 10.0 | 3.2 | -- | -- | -- |

* Any of the materials listed in the first column can be used at the rates shown below. **High Rates, not desirable in row fertilization, are omitted in the table. **Example:** You wish to apply calcium nitrate at the rate of 500 lbs per acre. It weighs approximately 19 oz per pt. For application to 100 $ft^2$, you need 1.2 lb or 1.0 pt.

**Table 9. Fertilizer weight as measured by standard pot size**

| Fertilizer | Pot Size | | | | | |
|---|---|---|---|---|---|---|
| | **2¼"** | **3"** | **3½"** | **4"** | **5"** | **6"** |
| Ammonium nitrate | 2 oz | 5½ oz | 9 oz | 15 oz | 1 lb 12 oz | 2 lb 15 oz |
| Urea, 45-0-0 | 2½ oz | 6 oz | 9 oz | 1 lb | 1 lb 13 oz | 3 lb |
| Superphosphate | 2½ oz | 6 oz | 9½ oz | 1 lb | 1 lb 14 oz | 3 lb 2 oz |
| Dusting sulfur | 2½ oz | 6 oz | 10 oz | 1 lb | 1 lb 14 oz | 3 lb 3 oz |
| Peters, 20-5-30 | 2½ oz | 6 oz | 10 oz | 1 lb 1 oz | 1 lb 15 oz | 3 lb 3 oz |
| Ammonium sulfate | 3 oz | 7 oz | 11 oz | 1 lb 3 oz | 2 lb 3 oz | 3 lb 11 oz |
| Osmocote, 14-14-14 | 3 oz | 7½ oz | 12 oz | 1 lb 4 oz | 2 lb 5 oz | 3 lb 13 oz |
| MagAmp, 12-62-0 | 3 oz | 7½ oz | 12 oz | 1 lb 4 oz | 2 lb 5 oz | 3 lb 14 oz |
| Gypsum, $CaSO_4$ | 3 oz | 8 oz | 12½ oz | 1 lb 5 oz | 2 lb 7 oz | 4 lb 1 oz |
| Calcium nitrate | 3 oz | 8 oz | 12½ oz | 1 lb 6 oz | 2 lb 8 oz | 4 lb 2 oz |
| Peters, 15-0-15 | 3½ oz | 8 oz | 13 oz | 1 lb 6 oz | 2 lb 9 oz | 4 lb 5 oz |
| Potassium chloride | 3½ oz | 9 oz | 14 oz | 1 lb 8 oz | 2 lb 12 oz | 4 lb 9 oz |
| Sodium nitrate | 4 oz | 9 oz | 15 oz | 1 lb 9 oz | 2 lb 14 oz | 4 lb 13 oz |
| Dolomitic limestone | 5½ oz | 13 oz | 1 lb 5 oz | 2 lb 4 oz | 4 lb 2 oz | 6 lb 14 oz |

Clay flower pots are frequently used for fertilizer measurement by greenhouse operators. The above shows average weights of several representative fertilizers as measured by standard clay pots when level full. The 3-inch standard is considered to contain 8 fl oz or 1 cup. Since the actual pot size varies with the manufacturer and the volume of a given weight of fertilizer varies with moisture and compaction, deviations of 10 percent may be expected but up to 40 percent may occur.

**Tables 10 through 14** help determine the correct application rates for fertilizers with various analysis when nutrition recommendations are based on parts per million and fertilizer injectors are used to deliver liquid plant fertilizer. Table 12 is designed to help growers calibrate their injectors.

**Table 10. Element concentrations for pounds soluble fertilizer in 1000 gal (U.S.) water**

| Desired ppm | Pounds of Fertilizer Needed | | | | | | | | | | | | |
|---|---|---|---|---|---|---|---|---|---|---|---|---|---|
| | % Nitrogen (N) | | | | | % Phosphate ($P_2O_5$) | | | | % Potash ($K_2O$) | | | |
| | 30 | 25 | 20 | 15 | 10 | 20 | 15 | 10 | 5 | 25 | 20 | 15 | 10 |
| 300 | 8.3 | 10.0 | 12.5 | 16.7 | 23.0 | -- | -- | -- | -- | 12.0 | 15.0 | 20.0 | 30.0 |
| 275 | 7.8 | 9.2 | 11.4 | 15.3 | 23.0 | -- | -- | -- | -- | 11.0 | 13.7 | 18.2 | 27.5 |
| 250 | 7.3 | 8.4 | 10.2 | 13.9 | 21.8 | -- | -- | -- | -- | 10.0 | 12.5 | 16.7 | 26.2 |
| 225 | 6.2 | 7.5 | 9.3 | 12.5 | 18.7 | -- | -- | -- | -- | 9.0 | 11.3 | 15.0 | 22.5 |
| 200 | 5.6 | 6.7 | 8.4 | 11.1 | 16.7 | 19.2 | -- | -- | -- | 8.0 | 10.0 | 13.3 | 20.0 |
| 175 | 4.9 | 5.8 | 7.3 | 9.7 | 14.6 | 16.8 | 22.4 | -- | -- | 7.0 | 8.8 | 10.7 | 17.5 |
| 150 | 4.2 | 5.0 | 6.3 | 8.3 | 12.5 | 14.4 | 19.2 | 28.8 | -- | 6.0 | 7.6 | 10.0 | 15.0 |
| 125 | 3.5 | 4.2 | 5.3 | 7.0 | 10.2 | 12.0 | 16.0 | 24.0 | 48.0 | 5.0 | 6.2 | 8.4 | 12.5 |
| 100 | 2.8 | 3.4 | 4.2 | 5.6 | 8.3 | 9.6 | 12.6 | 19.2 | 38.4 | 4.0 | 5.0 | 6.7 | 10.0 |
| 75 | 2.1 | 2.5 | 3.1 | 4.2 | 6.2 | 7.2 | 9.6 | 14.4 | 28.8 | 3.0 | 3.8 | 5.0 | 7.5 |
| 50 | 1.4 | 1.7 | 2.1 | 2.8 | 4.2 | 4.8 | 6.4 | 9.6 | 19.2 | 2.0 | 2.5 | 3.4 | 5.0 |
| 25 | 0.7 | 0.9 | 1.1 | 1.4 | 2.1 | 2.4 | 3.2 | 4.8 | 9.6 | 1.0 | 1.3 | 1.7 | 2.5 |

**Example:** You wish to apply 200 ppm N using a 20-10-20 soluble fertilizer. Reading across from 200 ppm under the 20 percent N column, you find 8.4 lb are needed for 1000 gal water. **NOTES:** 1 oz/2 gal is about 30 lb/1000 gal; 1 oz/3 gal is about 20 lb/100 gal; 1 oz/5 gal is about 12 lb/1000 gal. 1 oz/gal = 7490 ppm; 1 oz/100 gal = 75 ppm. To determine parts per million (ppm) of an element in a fertilizer, simply multiply the percent of that element by 75. The answer will be the ppm of the element per oz of the fertilizer in 100 gal of water. As an example, ammonium sulfate contains approximately 20 percent nitrogen. Twenty percent multiplied by 75 is 15, which is the ppm of nitrogen in 1 oz of ammonium sulfate per 100 gal of water.

| Table 11. Injection ratios and nitrogen concentrations for constant fertilization[1] | | | | | | | |
|---|---|---|---|---|---|---|---|
| oz fertilizer per gal concentrate | | | | oz fertilizer per gal concentrate | | | |
| | 100 ppm N | 150 ppm N | 200 ppm N | | 100 ppm N | 150 ppm N | 200 ppm N |
| **Ratio** | **30% N formula[a]** | | | **Ratio** | **20% N formula[c]** | | |
| 1:300 | 13.5 | 20.2 | 27.0 | 1:300 | 20.2 | 30.3 | 40.5 |
| 1:200 | 9.0 | 13.5 | 18.0 | 1:200 | 13.5 | 20.2 | 27.0 |
| 1:150 | 6.7 | 10.1 | 13.5 | 1:150 | 10.1 | 15.1 | 20.2 |
| 1:128 | 5.7 | 8.6 | 11.5 | 1:128 | 8.6 | 12.9 | 17.2 |
| 1:100 | 4.5 | 6.7 | 9.0 | 1:100 | 6.7 | 10.1 | 13.5 |
| 1:50 | 2.2 | 3.3 | 4.5 | 1:50 | 3.3 | 5.0 | 6.7 |
| 1:30 | 13 | 2.0 | 2.7 | 1:30 | 2.0 | 3.0 | 4.0 |
| 1:24 | 1.0 | 1.6 | 2.1 | 1:24 | 1.6 | 2.4 | 3.2 |
| 1:15 | 0.67 | 1.0 | 1.3 | 1:15 | 1.0 | 1.5 | 2.0 |
| | **25% N formula[b]** | | | | **15% N formula[d]** | | |
| 1:300 | 16.5 | 24.7 | 33.0 | 1:300 | 27.0 | 40.5 | 54.0 |
| 1:200 | 11.0 | 16.5 | 22.0 | 1:200 | 18.0 | 27.0 | 36.0 |
| 1:150 | 8.2 | 12.3 | 16.5 | 1:150 | 13.5 | 20.2 | 27.0 |
| 1:128 | 7.0 | 10.5 | 14.0 | 1:128 | 11.5 | 17.2 | 23.0 |
| 1:100 | 5.5 | 8.2 | 11.0 | 1:100 | 9.0 | 13.5 | 18.0 |
| 1:50 | 2.7 | 4.1 | 5.5 | 1:50 | 4.5 | 6.7 | 9.0 |
| 1:30 | 1.6 | 2.4 | 3.3 | 1:30 | 2.7 | 4.0 | 5.4 |
| 1:24 | 1.3 | 1.9 | 2.6 | 1:24 | 2.1 | 3.2 | 4.3 |
| 1:15 | 0.82 | 1.2 | 1.6 | 1:15 | 1.3 | 2.0 | 2.7 |

[1]From Ball RedBook, 16th Edition, published by Ball Publishing. Reprinted with permission
[a]e.g, 30-10-10
[b]e.g., 25-5-20, 25-10-10, 25-0-25
[c]e.g., 20-20-20, 20-5-30, 21-7-7
[d]e.g., 15-15-15, 15-30-15, 16-4-12

**Table 12. Injector calibration with a conductivity meter[1]**

**A. Peters Single Element Fertilizer Components**

| ppm Nitrogen | Ammonium Nitrate - $NH_4NO_3$ 34% N | Ammonium Sulfate $(NH_4)_2SO_4$ 21% N | Sodium Nitrate $NaNO_3$ 16% N | Potassium Nitrate - $KNO_3$ 14% N | Calcium Nitrate $Ca(NO_3)_2$ 15.5% N | Epsom Salt $MgSO_4$ 10% Mg |
|---|---|---|---|---|---|---|
| 50 | 0.23 | 0.45 | 0.43 | 0.48 | 0.37 | 0.38 |
| 75 | 0.35 | 0.68 | 0.65 | 0.71 | 0.55 | 0.56 |
| 100 | 0.46 | 0.90 | 0.86 | 0.95 | 0.74 | 0.75 |
| 125 | 0.58 | 1.13 | 1.08 | 1.18 | 0.92 | 0.94 |
| 150 | 0.69 | 1.35 | 1.29 | 1.42 | 1.11 | 1.13 |
| 175 | 0.81 | 1.58 | 1.51 | 1.66 | 1.30 | 1.31 |
| 200 | 0.92 | 1.90 | 1.72 | 1.90 | 1.48 | 1.50 |
| 225 | 1.04 | 2.03 | 1.94 | 2.14 | 1.66 | 1.69 |
| 250 | 1.15 | 2.25 | 2.15 | 2.37 | 1.85 | 1.88 |
| 275 | 1.27 | 2.48 | 2.37 | 2.61 | 2.04 | 2.06 |
| 300 | 1.38 | 2.70 | 2.58 | 2.85 | 2.22 | 2.25 |
| 350 | 1.61 | 3.15 | 3.01 | 3.32 | 2.59 | 2.63 |
| 400 | 1.84 | 3.60 | 3.44 | 3.80 | 2.96 | 3.00 |
| 450 | 2.07 | 4.05 | 3.87 | 4.27 | 3.33 | 3.38 |
| 500 | 2.30 | 4.50 | 4.30 | 4.75 | 3.70 | 3.75 |
| 550 | 2.53 | 4.95 | 4.73 | 5.22 | 4.07 | 4.13 |
| 600 | 2.76 | 5.40 | 5.16 | 5.70 | 4.44 | 4.50 |
| 650 | 2.99 | 5.85 | 5.59 | 6.17 | 4.81 | 4.88 |
| 700 | 3.22 | 6.30 | 6.02 | 6.65 | 5.18 | 5.25 |
| 750 | 3.45 | 6.75 | 6.45 | 7.12 | 5.50 | 5.63 |
| 800 | 3.68 | 7.20 | 6.88 | 7.60 | 5.92 | 6.00 |
| 850 | 3.91 | 7.65 | 7.31 | 8.07 | 6.29 | 6.38 |
| 900 | 4.14 | 8.10 | 7.74 | 8.55 | 6.66 | 6.75 |
| 950 | 4.37 | 8.55 | 8.17 | 9.02 | 7.03 | 7.13 |
| 1000 | 4.60 | 9.00 | 8.60 | 9.50 | 7.40 | 7.50 |

[1] Adapted from Grace Horticultural Products. W.R. Grace & Co. Cambridge, Massachusetts 02140.

**NOTES:** 1) For use with meters in millimhos with Peters® Single Element Fertilizer Components.
2) These are readings made with distilled water.
3) Test your plain irrigation water first and subtract that reading from the fertilizer-injected water. For example, your water test indicates 0.5 mmhos and you are applying 500 ppm N with calcium nitrate. Your calibration reading is 3.70 - 0.5 = 3.20 mmhos.

**B. Peters Mixed Soluble Fertilizer Analysis**

| ppm N | 20-20-20 20-19-18 | 20-10-15 | 20-5-30 | 25-5-20 | 25-10-10 30-10-10 | 5-11-26 Hydrosol | 15-16-17 15-11-29 15-20-25 | 15-15-15 | 15-10-30 | 15-30-15 | 15-0-15 | 16-4-12 | 21-7-7 Acid | 21-7-7 Neutral |
|---|---|---|---|---|---|---|---|---|---|---|---|---|---|---|
| 50 | 0.23 | 0.31 | 0.22 | 0.12 | 0.09 | 1.00 | 0.32 | 0.30 | 0.32 | 0.31 | 0.36 | 0.32 | 0.28 | 0.21 |
| 75 | 0.34 | 0.47 | 0.33 | 0.18 | 0.14 | 1.50 | 0.48 | 0.46 | 0.51 | 0.47 | 0.55 | 0.48 | 0.42 | 0.32 |
| 100 | 0.45 | 0.62 | 0.44 | 0.24 | 0.18 | 2.00 | 0.65 | 0.62 | 0.70 | 0.62 | 0.74 | 0.64 | 0.56 | 0.42 |
| 125 | 0.56 | 0.78 | 0.56 | 0.30 | 0.23 | 2.50 | 0.82 | 0.79 | 0.87 | 0.78 | 0.94 | 0.81 | 0.70 | 0.53 |
| 150 | 0.68 | 0.93 | 0.69 | 0.36 | 0.27 | 3.00 | 1.00 | 0.96 | 1.50 | 0.93 | 1.15 | 0.98 | 0.84 | 0.63 |
| 175 | 0.79 | 1.09 | 0.81 | 0.43 | 0.32 | 3.50 | 1.20 | 1.13 | 1.23 | 1.09 | 1.35 | 1.14 | 0.98 | 0.74 |
| 200 | 0.90 | 1.24 | 0.94 | 0.51 | 0.36 | 4.00 | 1.40 | 1.30 | 1.41 | 1.24 | 1.55 | 1.31 | 1.12 | 0.84 |
| 225 | 1.01 | 1.40 | 1.07 | 0.57 | 0.41 | 4.50 | 1.56 | 1.47 | 1.59 | 1.40 | 1.72 | 1.47 | 1.26 | 0.95 |
| 250 | 1.13 | 1.55 | 1.20 | 0.62 | 0.47 | 5.00 | 1.72 | 1.65 | 1.78 | 1.55 | 1.90 | 1.62 | 1.40 | 1.05 |
| 275 | 1.24 | 1.71 | 1.32 | 0.71 | 0.51 | 5.50 | 1.91 | 1.82 | 1.95 | 1.71 | 2.09 | 1.81 | 1.54 | 1.16 |
| 300 | 1.35 | 1.86 | 1.43 | 0.80 | 0.54 | 6.00 | 2.10 | 1.98 | 2.12 | 1.86 | 2.28 | 2.00 | 1.68 | 1.26 |
| 350 | 1.58 | 2.17 | 1.66 | 0.92 | 0.64 | 6.50 | 2.45 | 2.31 | 2.45 | 2.17 | 2.64 | 2.29 | 1.96 | 1.47 |
| 400 | 1.80 | 2.48 | 1.90 | 1.04 | 0.74 | 7.00 | 2.80 | 2.65 | 2.78 | 2.48 | 3.00 | 2.58 | 2.24 | 1.68 |
| 450 | 2.03 | 2.79 | 2.15 | 1.18 | 0.85 | 7.50 | 3.15 | 2.98 | 3.12 | 2.79 | 3.34 | 2.93 | 2.52 | 1.89 |
| 500 | 2.25 | 3.10 | 2.40 | 1.32 | 0.96 | 8.00 | 3.50 | 3.25 | 3.46 | 3.10 | 3.68 | 3.28 | 2.80 | 2.10 |
| 550 | 2.48 | 3.41 | 2.61 | 1.45 | 1.06 | - | 3.84 | 3.55 | 3.76 | 3.41 | 3.98 | 3.57 | 3.08 | 2.31 |
| 600 | 2.70 | 3.72 | 2.82 | 1.58 | 1.16 | - | 4.18 | 3.85 | 4.06 | 3.72 | 4.28 | 3.86 | 3.36 | 2.52 |
| 650 | 2.93 | 4.03 | 3.03 | 1.71 | 1.26 | - | 4.52 | 4.15 | 4.36 | 4.03 | 4.58 | 4.15 | 3.64 | 2.73 |
| 700 | 3.15 | 4.34 | 3.24 | 1.84 | 1.36 | - | 4.80 | 4.45 | 4.66 | 4.34 | 4.88 | 4.44 | 3.92 | 2.94 |
| 750 | 3.38 | 4.65 | 3.45 | 1.98 | 1.46 | - | 5.20 | 4.75 | 4.95 | 4.65 | 5.20 | 4.72 | 4.20 | 3.15 |
| 800 | 3.60 | 4.96 | 3.66 | 2.11 | 1.56 | - | 5.54 | 5.05 | 5.25 | 4.96 | 5.50 | 4.98 | 4.48 | 3.36 |
| 850 | 3.83 | 5.27 | 3.87 | 2.24 | 1.66 | - | 5.88 | 5.35 | 5.55 | 5.27 | 5.80 | 5.24 | 4.76 | 3.57 |
| 900 | 4.05 | 5.58 | 4.08 | 2.37 | 1.76 | - | 6.22 | 5.65 | 5.85 | 5.58 | 6.10 | 5.50 | 5.04 | 3.78 |
| 950 | 4.28 | 5.89 | 4.29 | 2.50 | 1.86 | - | 6.56 | 5.95 | 6.15 | 5.89 | 6.40 | 5.76 | 5.32 | 3.99 |
| 1000 | 4.50 | 6.20 | 4.5 | 2.63 | 1.96 | - | 6.90 | 6.25 | 6.45 | 6.20 | 6.70 | 6.00 | 5.60 | 4.20 |

**NOTES:** 1) For use with meters in millimhos with Peters® Fertilizer formulations. 2) These readings are made with distilled water. 3) Test your plain irrigation water first and subtract that reading from the fertilizer-injected water. For example, your water test indicates 0.2 mmhos and you are applying 200 ppm N with 15-15-15 fertilizer. Your calibration reading is 1.30 - 0.2 = 1.10 mmhos.

**Table 13. Parts per million of desired nutrient to ounces of fertilizer carrier in 100 gallons of water (or grams in 1 liter) and vice versa[1]**

| Ounces of Fertilizer Carrier in 100 Gallons | Percentage of Desired Nutrient in Fertilizer Carrier | | | | | | | | | | | | | |
|---|---|---|---|---|---|---|---|---|---|---|---|---|---|---|
| | **12** | **13** | **14** | **15.5** | **16** | **20** | **20.5** | **21** | **33** | **44** | **45** | **53** | **60** | **62** |
| 1 | 9 | 9.7 | 10.5 | 11.6 | 12.0 | 15.0 | 15.3 | 15.7 | 24.7 | 32.9 | 33.7 | 39.7 | 44.9 | 46.4 |
| 2 | 18 | 19.5 | 21.0 | 23.2 | 24.0 | 29.9 | 30.7 | 31.4 | 49.4 | 65.9 | 67.4 | 79.3 | 89.8 | 92.0 |
| 3 | 27 | 29.3 | 31.4 | 35.0 | 35.9 | 44.9 | 46.0 | 47.2 | 74.1 | 98.8 | 101.0 | 117.0 | 134.7 | 139.2 |
| 4 | 36 | 38.9 | 41.9 | 46.4 | 47.9 | 59.9 | 61.4 | 62.9 | 98.8 | 131.7 | 134.7 | 158.7 | 179.6 | 185.6 |
| 6 | 54 | 58.4 | 62.9 | 70.0 | 71.9 | 89.9 | 92.1 | 94.3 | 148.2 | 197.6 | 202.1 | 238.0 | 269.4 | 278.4 |
| 8 | 72 | 77.8 | 83.8 | 92.8 | 95.8 | 119.7 | 122.7 | 125.7 | 197.6 | 263.4 | 269.4 | 317.3 | 359.2 | 371.2 |
| 16 | 144 | 155.7 | 167.7 | 185.6 | 191.7 | 239.5 | 245.5 | 251.5 | 395.2 | 526.9 | 538.9 | 634.6 | 718.5 | 742.4 |
| 24 | 216 | 233.5 | 251.5 | 278.4 | 287.5 | 359.2 | 368.2 | 377.2 | 592.7 | 790.3 | 808.3 | 952.0 | 1077.7 | 1113.6 |
| 32 | 288 | 311.4 | 335.4 | 371.3 | 383.4 | 479.0 | 490.9 | 502.9 | 790.3 | 1053.7 | 1077.7 | 1269.3 | 1436.9 | 1484.8 |
| 40 | 359 | 389.2 | 419.2 | 464.0 | 479.2 | 598.7 | 613.7 | 628.6 | 987.9 | 1317.2 | 1347.1 | 1586.6 | 1796.2 | 1856.1 |
| 48 | 431 | 467.0 | 503.0 | 556.8 | 575.0 | 718.5 | 736.4 | 754.4 | 1185.5 | 1580.6 | 1616.5 | 1903.9 | 2155.4 | 2227.2 |
| 56 | 503 | 544.7 | 586.9 | 649.7 | 670.9 | 838.2 | 859.2 | 880.1 | 1383.0 | 1844.0 | 1886.0 | 2221.2 | 2514.6 | 2598.4 |
| 64 | 575 | 622.7 | 670.7 | 742.4 | 766.7 | 958.0 | 981.9 | 1005.8 | 1580.6 | 2107.5 | 2155.4 | 2538.6 | 2873.9 | 2969.7 |
| **Grams of Fertilizer Carrier in 1 Liter** | **ppm** | | | | | | | | | | | | | |
| 0.1 | 12 | 13 | 14 | 16 | 16 | 20 | 20.5 | 21 | 33 | 44 | 45 | 53 | 60 | 62 |
| 0.2 | 24 | 26 | 28 | 31 | 3 | 40 | 41.0 | 42 | 66 | 88 | 90 | 106 | 120 | 124 |
| 0.3 | 36 | 39 | 42 | 47 | 48 | 60 | 61.5 | 63 | 99 | 132 | 135 | 159 | 180 | 186 |
| 0.4 | 48 | 52 | 56 | 62 | 64 | 80 | 82.0 | 84 | 132 | 176 | 180 | 212 | 240 | 248 |
| 0.6 | 72 | 78 | 84 | 93 | 96 | 120 | 123.0 | 126 | 198 | 264 | 270 | 318 | 360 | 372 |
| 0.8 | 96 | 104 | 112 | 124 | 128 | 160 | 164.0 | 168 | 264 | 352 | 360 | 424 | 480 | 496 |
| 1.0 | 120 | 130 | 140 | 155 | 160 | 200 | 205.0 | 210 | 330 | 440 | 450 | 530 | 600 | 620 |
| 1.5 | 180 | 195 | 210 | 233 | 240 | 300 | 307.0 | 315 | 495 | 660 | 675 | 795 | 900 | 930 |
| 2.0 | 240 | 260 | 280 | 310 | 320 | 400 | 410.0 | 420 | 660 | 880 | 900 | 1060 | 1200 | 1240 |
| 2.5 | 300 | 325 | 350 | 388 | 400 | 500 | 512.5 | 525 | 825 | 1100 | 1125 | 1325 | 1500 | 1550 |
| 3.0 | 360 | 390 | 420 | 465 | 480 | 600 | 615.0 | 630 | 990 | 1320 | 1350 | 1590 | 1800 | 1860 |
| 3.5 | 420 | 455 | 490 | 543 | 560 | 700 | 717.5 | 735 | 1155 | 1540 | 1575 | 1855 | 2100 | 2170 |
| 4.0 | 480 | 520 | 560 | 620 | 640 | 800 | 820.0 | 840 | 1320 | 1760 | 1800 | 2120 | 2400 | 2480 |

[1]From Nelson, P.V. 1998. Greenhouse Operations and Management, 5th ed. Published by Prentice Hall, Inc. Reprinted with permission.

| Table 14. Conversion factors among electrical conductivity (EC) units[1] | | |
|---|---|---|
| **From** | **To** | **Multiply by:** |
| mmhos/cm or mS/cm or dS/cm | mhos x $10^{-5}$/cm | 100 |
| mhos x $10^{-5}$/cm | mmhos/cm or mS/cm or dS/cm | 0.01 |
| mmhos/cm or mS/cm or dS/cm | μmhos or mhos x $10^{-6}$ | 1000 |
| μmhos or mhos x $10^{-6}$ | mmhos/cm or mS/cm or dS/cm | 0.001 |
| mmhos/cm or mS/cm or dS/cm | ppm | 670[2] |
| ppm | mmhos/cm or mS/cm or dS/cm | 0.0014925[2] |
| mhos x $10^{-5}$/cm | ppm | 6.70[2] |
| ppm | mhos x $10^{-5}$/cm | 0.14925[2] |
| μmhos or mhos x $10^{-6}$ | ppm | 0.670[2] |
| ppm | μmhos or mhos x $10^{-6}$ | 1.4925[2] |

[1] Adapted from T.J. Cavins, et al., 2000.
[2] Some labs report EC in terms of ppm or cnvert EC to ppm. Although 670 is the basis used in this example, the conversion factor can vary between 640 and 700. This conversion factor is an average due to the variability in the type of fertilizer salts that contribute to the substrate EC in each sample, and it should be considered a broad approximation. Expressing EC in terms of mS/cm or mhos/cm is the preferred method.

**Table 15** is designed to help growers decide which acid to add and in what quantities to acidify their irrigation water.

**Table 15. Various acids to add to irrigation water for acidification[1]**

**Note:** The table is an example from software called *Alkalinity Calculator,* available at www.ces.ncsu.edu/depts/hort/floriculture/software/alk.html It is an acidification analysis done on a water sample with a starting pH of 8.0 and alkalinity of 200 ppm $CaCO_3$ acidified to an end point pH of 5.8. For your specific water sample, download the *Alkalinity Calculator* and follow the directions listed on the website. You will need to obtain a water report on your irrigation water **prior to** running the software. You will need to know the water pH and alkalinity of your sample and have an idea about what end-point pH you want to obtain after acidification. The software also gives you information about the cost of the acidification treatment.

**Alternative Acids to Add to Irrigation Water**

| **Acids:** / **Amounts** | **Phosphoric Acid (75%)** | **Phosphoric Acid (85%)** | **Sulfuric Acid (35%)** | **Sulfuric Acid (93%)** | **Nitric Acid (61.4%)** | **Nitric Acid (67%)** |
|---|---|---|---|---|---|---|
| ***For Small Volumes*** | | | | | | |
| ml per liter | 0.253 | 0.207 | 0.348 | 0.087 | 0.234 | 0.209 |
| fl oz per gallon | 0.032 | 0.027 | 0.044 | 0.011 | 0.030 | 0.027 |
| ml per gallon | 0.956 | 0.785 | 1.316 | 0.330 | 0.884 | 0.793 |
| ***For a 1:100 Injector*** | | | | | | |
| fl oz per gallon (conc.) | 3.23 | 2.65 | 4.45 | 1.12 | 2.99 | 2.68 |
| ml per gallon (conc.) | 95.63 | 78.47 | 131.59 | 32.98 | 88.40 | 79.28 |
| ***For a 1:128 Injector*** | | | | | | |
| fl oz per gallon (conc.) | 4.14 | 3.40 | 5.70 | 1.43 | 3.83 | 3.43 |
| ml per gallon (conc.) | 122.41 | 100.44 | 168.44 | 42.22 | 113.16 | 101.48 |
| ***For a 1:200 Injector*** | | | | | | |
| fl oz per gallon (conc.) | 6.47 | 5.31 | 8.90 | 2.23 | 5.98 | 5.36 |
| ml per gallon (conc.) | 191.27 | 156.94 | 263.19 | 65.97 | 176.81 | 158.56 |

**Nutrients Added by Each Type of Acid**

| Nutrients Added: | Phosphorus | Phosphorus | Sulfur | Sulfur | Nitrogen | Nitrogen |
|---|---|---|---|---|---|---|
| Amount Added (ppm): | 94.6 | 94.6 | 50.3 | 50.3 | 43.7 | 43.7 |

*Use the information above for modifying your fertility program.*

**Tables 16 through 20** help determine which fertilizers to use based on chemical analysis, reaction in substrate, longevity in substrate (slow release fertilizers), and incorporation rates for some popular slow release fertilizers. Tables 17 and 18 are specifically designed to provide detailed information on fertilizer calculations, which also aid determine correct application rates.

**Table 16. Amounts of nutrient sources to combine in making various fertilizer formulas[1]**

| | | Nutrient Sources[2] | | | | | | | | | | |
|---|---|---|---|---|---|---|---|---|---|---|---|---|
| **Fertilizer Name** | **Analysis** | **33-0-0** | **13-0-44** | **15.5-0-0** | **16-0-0** | **21-0-0** | **45-0-0** | **0-0-60** | **12-62-0** | **21-53-0** | **% Nitrate** | **Reaction** |
| Ammonium nitrate | 33-0-0 | X | | | | | | | | | 50 | A |
| Potassium nitrate | 13-0-44 | | X | | | | | | | | 0 | N |
| Calcium nitrate | 15.5-0-0 | | | X | | | | | | | 6 | B |
| Sodium nitrate | 16-0-0 | | | | X | | | | | | 0 | B |
| Ammonium sulfate | 21-0-0 | | | | | X | | | | | 100 | A |
| Urea | 45-0-0 | | | | | | X | | | | 100 | SA |
| Potassium chloride | 0-0-60 | | | | | | | X | | | - | N |
| Monoammonium phosphate | 12-62-0 | | | | | | | | X | | 100 | A |
| Diammonium phosphate[3] | 21-53-0 | | | | | | | | | X | 100 | SA |
| Magnesium nitrate | 10-0-0 | | | | | | | | | | 0 | B |
| | | | | | | | | | | | | |
| Chrysanthemum green | 18-0-22 | 1 | 2 | | | 1 | | | | | 47 | A |
| General Summer | 20-10-24 | 1 | | | | | 1 | 2 | | 1 | 83 | A |
| General low phosphate | 21-4-20 | 7 | | | | | | 4 | | 1 | 55 | A |
| General summer | 21-17-20 | 1 | | | | | 2 | 3 | | 3 | 90 | A |
| General | 17-6-27 | 4 | | | | | | 4 | | 1 | 57 | A |
| UConn Mix | 19-5-24 | | 6 | 2 | | | 2 | | 1 | | 49 | N |
| Editor's favorite | 20-5-30 | | 13 | | | | 4 | | | 2 | 57 | SA |
| 20-20-20 substitute | 20-20-22 | | 4 | | | | 1 | | | 3 | 67 | SA |
| Starter and pink hydrangea | 12-41-15 | | 1 | | | | | | 2 | | 65 | SA |
| Starter and pink hydrangea | 17-35-16 | | | | | | 1 | 4 | | 10 | 100 | SA |
| N-K only | 16-0-24 | 2 | | | 1 | | | 2 | | | 40 | SA |
| N-K only | 20-0-30 | 1 | 2 | | | | | | | | 28 | SA |
| Blue hydrangea | 13-0-22 | | | | | 2 | | 1 | | | 100 | VA |
| Blue hydrangea | 15-0-15 | | | | | 3 | | 1 | | | 100 | VA |
| Acid | 21-9-9 | 3 | 1 | | | 7 | | 1 | | 2 | 79 | VA |
| Spring carnation | 10-0-17 | | | | 5 | | | 2 | | | 0 | B |
| Winter nitrate | 15-0-15 | | 1 | 2 | | | | | | | 5 | B |
| Winter potash | 15-0-22 | | 1 | 1 | | | | | | | 4 | B |
| Lily substitute | 16-4-12 | 1 | 4 | 6 | | | | | | 1 | 22 | N |
| High K | 15-10-30 | | 7 | 1 | | | | | | 2 | 28 | N |

1 From Nelson, P.V. 1998. Greenhouse Operations and Management, 5th ed. Published by Prentice Hall, Inc. Reprinted with permission.
2 For names of nutrient sources, see the first nine entries in the Name column.
3 Diammonium phosphate may be pelletized and coated. To dissolve, use very hot water and stir vigorously. Sediment formation should not cause concern. Use crystalline potassium chloride if possible.
4 B = basic; N = neutral; SA = slightly acid; A = acid; VA = very acid.

**NOTE:** For example, an 18-0-22 formula fertilizer can be formulated by blending together 1 lb of ammonium nitrate plus 2 lbs of potassium nitrate plus 1 lb of ammonium sulfate. This formulation is determined by locating the 18-0-22 formula in the Analysis column. Then the three numbers 1, 2 and 1 are located in the row after this formula. Each of the three numbers is traced to the X above it and then to the nutrient source to the left of the X.

| Table 17. Formulas for additional fertilizer calculations | | |
|---|---|---|
| **Compound** | **Formula** | **Formula Weight** |
| Ammonium Nitrate | $NH_4NO_3$ | 80.8 |
| Ammonium Sulfate | $(NH_4)_2SO_4$ | 132.0 |
| Calcium Nitrate | $Ca(NO_3)_2$ | 164.0 |
| Potassium Nitrate | $KNO_3$ | 101.1 |
| Potassium Chloride | KCl | 74.6 |
| Potassium Sulfate | $K_2SO_4$ | 174.2 |
| Urea | $CO(NH_2)_2$ | 60.0 |
| **Element** | **Symbol** | **Atomic Weight** |
| Calcium | Ca | 40.1 |
| Carbon | C | 12.0 |
| Chlorine | Cl | 35.5 |
| Hydrogen | H | 1.0 |
| Nitrogen | N | 14.0 |
| Oxygen | O | 16.0 |
| Phosphorus | P | 31.0 |
| Potassium | K | 39.1 |

# Using Chemicals

1) mg of fertilizer source/liter of water = $\frac{\text{(ppm)(formula weight)}}{\text{(atomic weight of element)(number of units in formula of fertilizer source)}}$

2) ppm = $\frac{\text{(mg of fertilizer/liter of water)(atomic weight of element)(number of units of element in formula of fertilizer source)}}{\text{(formula weight of fertilizer source)}}$

3) to convert mg/l to lbs/100 gal, multiply mg by 0.0008344

4) to convert lbs/100 gal to mg/l, divide lbs by 0.0008344

EXAMPLE: How many pounds of potassium sulfate ($K_2SO_4$) need to be dissolved in 100 gallons of water to make 100 ppm K solution.

Get the formula weight of potassium sulfate ($K_2SO_4$) and the atomic weight of potassium from Table 14 (page 15).

Then:

1) mg of $K_2SO_4$ / liter of water = (100 x 174.2) ÷ (39.1 x 2) = 222.8 mg/L

2) 222.8 mg/L x 0.00083440 = 0.186 lbs potassium sulfate/100 gal

# Using Premixed Fertilizers

1) mg of mixed fertilizer/liter of water $= \frac{\text{(ppm of N desired) (100)}}{\text{(\% N in fertilizer)}}$

2) ppm of P $= \frac{\text{(mg of mixed fertilizer/liter of water) (\% } P_2O_5\text{) (0.4366)}}{100}$

3) ppm of K $= \frac{\text{(mg of mixed fertilizer/liter of water) (\% } K_2O\text{) (0.8301)}}{100}$

4) mg of mixed fertilizer/liter of water $= \frac{\text{(ppm of P desired) (100)}}{\text{(\% } P_2O_5\text{) (0.4366)}}$

5) mg of mixed fertilizer/liter of water $= \frac{\text{(ppm of K desired) (100)}}{\text{(\% } K_2O\text{) (0.8301)}}$

6) mg of mixed fertilizer/liter of water $= \frac{\text{(mg of mixed fertilizer/liter of water) (\% N)}}{10}$

**Table 18. Miscellaneous conversions used in fertilizer calculations**

1 millimeter or cubic centimeter of water weighs 1 gram
1 liter of water weighs 1 kilogram
1 gallon of water weighs 8.34 pounds

| | |
|---|---|
| 1 part per million (ppm) | = 0.0001 percent |
| 1 part per million | = 1 milligram/liter |
| 1 part per million | = 0.013 ounces in 100 gallons of water |
| 1 percent | = 10,000 ppm |
| 1 percent | = 10 grams per liter |
| 1 percent | = 10,000 grams per kilogram |
| 1 percent | = 1.33 ounces by weight per gallon of water |
| 1 percent | = 8.34 pounds per 100 gallons of water |

| | | |
|---|---|---|
| 0.1 percent | = 1000 ppm | = 1000 milligrams per liter |
| 0.01 percent | = 100 ppm | = 100 milligrams per liter |
| 0.001 percent | = 100 ppm | = 10 milligrams per liter |
| 0.0001 percent | = 100 ppm | = 1 milligram per liter |

**Approximate weight-volume measurements for making small volumes of water soluble fertilizers**

| | | | |
|---|---|---|---|
| 1 cup | = 8 oz or ½ lbs of fertilizer | 1 tablespoon | = 0.5 oz of fertilizer |
| 2 cups | = 1 lb of fertilizer | 2 tablespoons | = 1 oz of fertilizer |

**Useful conversions**

| | | | |
|---|---|---|---|
| 1 ton/acre | = 20.8 grams/square foot | 100 lbs/acre | = 0.2296 lbs/100 square feet |
| 1 ton/acre | = 1 lb/21.78 square feet | grams/square foot x 96 | = lbs/acre |
| 1 gram/square foot | = 96 lbs/acre | lbs/square foot x 43,560 | = lbs/acre |
| 1 lb/acre | = 0.0104 g/square foot | 100 square feet | = 1/435.6 or 0.002296 acres |
| 100 lbs/acre | = 0.2296 lbs/100 square feet | | |

**Weight conversions from lbs/acre to weight/100 square feet**

| lbs/acre | amount applied/100 square feet | lbs/acre | amount applied/100 square feet |
|---|---|---|---|
| 100 | 3.7 oz | 700 | 1 lb 10 oz |
| 200 | 7.4 oz | 800 | 1 lb 13 oz |
| 300 | 11.1 oz | 900 | 2 lb 1 oz |
| 400 | 14.8 oz | 1000 | 2 lb 5 oz |
| 500 | 1 lb 2½ oz | 2000 | 4 lb 10 oz |
| 600 | 1 lb 6 oz | | |

**Percent to Ratio Conversion**

| | |
|---|---|
| 2.0% = 1:50 | 0.6% = 1:167 |
| 1.5% = 1:67 | 0.5% = 1:200 |
| 1.0% = 1:100 | 0.4% = 1:250 |
| 0.9% = 1:111 | 0.3% = 1:333 |
| 0.8% = 1:128 | 0.2% = 1:500 |
| 0.7% = 1:143 | |

| Table 19. Osmocote® controlled-release fertilizers and their release periods[1] | | |
|---|---|---|
| **Analysis** | **Longevity[2] (months)** | **Product Name** |
| 14-14-14 | 3-4 | Osmocote®[3] |
| 19-6-12 | 3-4 | Osmocote®[3] |
| 13-13-13 | 8-9 | Osmocote® [3] |
| 18-6-12 | 8-9 | Osmocote®[3] Fast Start |
| 18-6-12 | 8-9 | Osmocote®[3] |
| 17-7-12 | 12-14 | Osmocote®[3] |
| 15-9-12 | 3-4 | Osmocote® Plus |
| 15-9-12 | 5-6 | Osmocote® Plus |
| 15-9-12 | 8-9 | Osmocote® Plus |
| 15-9-12 | 12-14 | Osmocote® Plus |
| 15-9-12 | 14-16 | Osmocote® Plus |
| 16-8-12 | 8-9 | Osmocote® Plus Minors Tablets |
| 19-5-8 + Minors | 8-9 | Osmocote® Pro with Poly-S |
| 19-5-9 + Minors | 12-14 | Osmocote® Pro with Poly-S |
| 20-5-8 + Minors | 8-9 | Osmocote® Pro with Poly-S |
| 24-4-8 | 8-9 | Osmocote® Pro with Resin Coated Urea |
| 24-4-7 | 12-14 | Osmocote® Pro with Resin Coated Urea |
| 24-4-6 | 14-16 | Osmocote® Pro with Resin Coated Urea |
| 21-4-7w/Mg & Fe | 8-9 | Osmocote® Pro with Resin Coated Urea |
| 21-3-7w/Mg & Fe | 12-14 | Osmocote® Pro with Resin Coated Urea |
| 22-4-9 + Minors | 5-6 | Osmocote® Pro with Resin Coated Urea |
| 22-4-8 + Minors | 8-9 | Osmocote® Pro with Resin Coated Urea |
| 22-4-7 + Minors | 12-14 | Osmocote® Pro with Resin Coated Urea |
| 22-4-6 + Minors | 14-16 | Osmocote® Pro with Resin Coated Urea |
| 20-4-9 | 8-9 | Osmocote® Pro with Methylene Urea and Ureaform |
| 20-4-8 | 12-14 | Osmocote® Pro with Methylene Urea and Ureaform |
| 23-4-8 + Minors | 14-16 | Osmocote® Pro + ScottKote™ |
| 19-7-10 + Fe | 3-4 | Osmocote® Pro with Uncoated NPK and Iron |
| 18-7-10 + Fe | 8-9 | Osmocote® Pro with Uncoated NPK and Iron |
| 17-7-10 + Fe | 12-14 | Osmocote® Pro with Uncoated NPK and Iron |
| 13-10-13 | 5-6 | Osmocote® Pro with IBDU and Minors |
| 15-10-10 | 8-9 | Osmocote® Pro with IBDU and Minors |
| 18-8-8 | 8-9 | Osmocote® Pro with IBDU and Minors |
| 20-4-8 | 8-9 | Osmocote® Pro with IBDU and Minors |
| 18-5-9 | 12-14 | Osmocote® Pro with IBDU and Minors |
| 17-6-12 + Minors | 3-4 | Sierra® Tablets |
| 17-6-10 + Minors | 8-9 | Sierra® Tablets |

[1] From the Scotts Company and Subsidiaries, Marysville, OH 43041.
[2] At an average root substrate temperature of 70 degrees F (21 degrees C).
[3] Six trace elements plus magnesium.

| Table 20. Rates in lb/yd$^3$ (kg/m$^3$) for incorporation of three of the most popular formulations of Nutricote into greenhouse root substrates | | | | | | |
|---|---|---|---|---|---|---|
| **Release Type (days[3])** | **Sensitive Crops** | | **Medium-Feeding Crops** | | **Heavy-Feeding Crops** | |
| | | | **13-13-13** | | | |
| 70 | 2.5 | (1.5) | 5 | (3.0) | 8.5 | (5.1) |
| 100 | 3.5 | (2.1) | | | | |
| 140 | 5 | (3.0) | 9 | (5.4) | 13 | (7.8) |
| 180 | 6 | (3.6) | 11 | (6.6) | 17 | (10.2) |
| 270 | 8 | (4.8) | 13 | (7.8) | 21 | (12.6) |
| 360 | 11 | (6.6) | 15 | (9.0) | 25 | (15.0) |
| | | | **14-14-14** | | | |
| 40 | 2 | (1.2) | 5 | (3.0) | 8 | (4.7) |
| 70 | 4 | (2.4) | 9 | (5.4) | 14 | (8.3) |
| 100 | 5 | (3.0) | 12 | (7.1) | 20 | (11.9) |
| 140 | 8 | (4.7) | 15 | (9.0) | 22 | (13.0) |
| 180 | 12 | (7.1) | 20 | (11.9) | 28 | (16.6) |
| 270 | 16 | (9.5) | 24 | (14.2) | 32 | (19.0) |
| 360 | 20 | (11.9) | 28 | (16.6) | 36 | (21.3) |
| | | | **18-6-8** | | | |
| 70 | 2 | (1.2) | 4.5 | (2.7) | 7.5 | (4.5) |
| 100 | 3 | (1.8) | 6.5 | (3.9) | 11 | (6.6) |
| 140 | 4.5 | (2.7) | 8 | (4.8) | 12 | (7.2) |
| 180 | 6 | (3.6) | 11 | (6.6) | 14 | (8.4) |
| 270 | 8 | (4.8) | 13 | (7.8) | 16 | (12.0) |
| 360 | 11 | (6.6) | 15 | (9.0) | 18 | (13.8) |

[1] From Nelson, P.V. 1998. Greenhouse Operations and Management, 5th ed. Published by Prentice Hall, Inc. Reprinted with permission.

**Tables 21 through 22** are designed to assist growers in correcting the pH of the growing substrate.

| Table 21. Materials and rates necessary to lower the pH level of greenhouse potting substrate 0.5 to 1.0 units [1] | | | |
|---|---|---|---|
| **Material** | **Pounds to incorporate in lbs/yd$^3$** | **Pounds to dissolve in 100 gal of water[2]** | **Rate of change in pH** |
| Aluminum sulfate | 1.5 | 6.0 | Rapid |
| Iron sulfate | 1.5 | 6.0 | Moderate |
| Finely-ground elemental sulfur | 0.75 | - | Slow |

[1] Adapted from Bailey, D.A. 1996.
[2] Apply this drench as a normal watering, about 1 quart per square foot or 8 fluid ounces per 6-inch pot.

| Table 22. Approximate amount of materials required to change pH of peat-based potting mixes[1] | | |
|---|---|---|
| **Pounds per cubic yard to change acidity to pH 5.7 for:** | | |
| **Beginning pH** | **50% Peat 50% Bark** | **100% Peat** |
| 7.5[2] | 2.0 | 3.4 |
| 7.0 | 1.5 | 2.5 |
| 6.5 | 1.0 | 2.0 |
| ***5.0[3]*** | ***2.5*** | ***3.5*** |
| ***4.5*** | ***5.6*** | ***7.4*** |
| ***4.0*** | ***7.9*** | ***11.5**** |
| ***3.5*** | ***10.5**** | ***15.58*** |

[1] Adapted from Conover, C.A., and R.T. Poole. 1984.
[2] Add sulfur or acidifying mixture to lower pH to 5.7.
***[3] Add dolomitic lime or equivalent amount of calcium to raise pH to 5.7.***
* Addition of more than 10 pounds of dolomitic per $yd^3$ can cause micro-nutrient deficiencies.

**Table 23** will help when applying various plant growth regulators.

| Table 23. Dilution/conversion chart for various plant growth regulators[1] | | | | | | |
|---|---|---|---|---|---|---|
| **A-REST (0.0264% active ingredient)** | | | | | | |
| **Spray** | **Spray Solution (ppm)** | **Fluid Ounces per Gallon of Final Solution** | | **Milliliters per Gallon of Final Solution** | | **Milliliters per Liter of Final Solution** |
| | 1 | 48 | | 14.34 | | 3.79 |
| | 3 | 1.45 | | 43.02 | | 11.36 |
| | 10 | 4.85 | | 143.39 | | 37.88 |
| | 25 | 12.12 | | 358.47 | | 94.70 |
| | 50 | 24.24 | | 716.93 | | 189.39 |
| | 75 | 36.36 | | 1075.40 | | 284.09 |
| | 100 | 48.48 | | 1433.87 | | 378.79 |
| **Drench** | **Dose (Milligrams per 6-in Pot)** | **Drench Volume per 6-in Pot* (Fluid Ounces)** | **ppm solution** | **Fluid Ounces per Gallon of Final Solution** | **Milliliters per Gallon of Final Solution** | **Milliliters per Liter of Final Solution** |
| | 0.125 | 4 | 1.06 | 0.51 | 15.15 | 4.0 |
| | 0.25 | 4 | 2.11 | 1.02 | 30.30 | 8.01 |
| | 0.50 | 4 | 4.23 | 2.05 | 60.61 | 16.01 |
| | 0.75 | 4 | 6.34 | 3.07 | 90.91 | 24.02 |
| | 1.00 | 4 | 8.45 | 4.10 | 121.21 | 32.02 |
| * 2 fl oz/4-in pot; 3 fl oz/5-in pot; 10 fl oz/8-in pot | | | | | | |

**Table 23.** ***(Continued)***

**CYCOCEL (11.8% active ingredient)**

| Spray | Spray Solution (ppm) | Fluid Ounces per Gallon of Final Solution | Milliliters per Gallon of Final Solution | Milliliters per Liter of Final Solution |
|---|---|---|---|---|
| | 1,000 | 1.08 | 32.08 | 8.47 |
| | 1,500* | 1.63 | 48.12 | 12.71 |
| | 2,000 | 2.17 | 64.16 | 16.95 |
| | 2,500 | 2.71 | 80.20 | 21.19 |
| | 3,000** | 3.25 | 96.24 | 25.42 |
| | 5,000 | 5.42 | 160.40 | 42.37 |

* Commonly referred to as 1:80. ** Commonly referred to as 1:40.

| Drench | Dose (Milligrams per 6-in Pot) | Drench Volume per 6-in Pot* (Fluid Ounces) | ppm | Fluid Ounces per Gallon of Final Solution | Milliliters per Gallon of Final Solution | Milliliters per Liter of Final Solution |
|---|---|---|---|---|---|---|
| | 355 | 6 | 2,000 | 2.17 | 64.18 | 16.95 |
| | 532 | 6 | 3,000** | 3.25 | 96.18 | 25.42 |
| | 710 | 6 | 4,000 | 4.34 | 128.36 | 33.90 |

* 2 fl oz/2¼- to 3-in pot; 3 fl oz/4-in pot; 4 fl oz/5-in pot; 8 fl oz/8-in pot.
** Commonly referred to as 1:40.

**B-NINE WSG (85% active ingredient)**

| Spray | Spray Solution (ppm) | Ounces per Gallon of Final Solution | Grams per Gallon of Final Solution | Grams per Liter of Final Solution |
|---|---|---|---|---|
| | 1,000 | 0.16 | 4.45 | 1.18 |
| | 2,500 | 0.39 | 11.13 | 2.94 |
| | 5,000 | 0.79 | 22.26 | 5.88 |
| | 7,500 | 1.18 | 33.40 | 8.82 |

**BONZI (0.4% active ingredient)**

| Spray | Spray Solution (ppm) | Fluid Ounces per Gallon of Final Solution | Milliliters per Gallon of Final Solution | Milliliters per Liter of Final Solution |
|---|---|---|---|---|
| | 1 | 0.032 | 0.95 | 0.25 |
| | 3 | 0.096 | 2.84 | 0.75 |
| | 5 | 0.160 | 4.73 | 1.25 |
| | 10 | 0.320 | 9.46 | 2.50 |
| | 15 | 0.480 | 14.20 | 3.75 |
| | 25 | 0.800 | 23.66 | 6.25 |
| | 45 | 1.440 | 42.59 | 11.25 |
| | 60 | 1.920 | 56.78 | 15.00 |
| | 90 | 2.880 | 85.17 | 22.50 |

**Table 23.** ***(Continued)***

**BONZI** ***(cont.)***

| Drench | Dose (Milligrams per 6-in Pot) | Drench Volume per 6-in Pot* (Fluid Ounces) | ppm | Fluid Ounces per Gallon of Final Solution | Milliliters per Gallon of Final Solution | Milliliters per Liter of Final Solution |
|---|---|---|---|---|---|---|
| | 0.1 | 4 | 0.85 | 0.03 | 0.8 | 0.21 |
| | 0.2 | 4 | 1.69 | 0.05 | 1.6 | 0.42 |
| | 0.5 | 4 | 4.23 | 0.14 | 4.0 | 1.06 |
| | 1.0 | 4 | 8.45 | 0.27 | 8.0 | 2.11 |
| | 1.9 | 4 | 16.06 | 0.51 | 15.2 | 4.02 |

* 2 fl oz/4-in pot; 3 fl oz/5-in pot; 10 fl oz/8-in pot.

**SUMAGIC (0.055% active ingredient)**

| Spray | Spray Solution (ppm) | Fluid Ounces per Gallon of Final Solution | Milliliters per Gallon of Final Solution | Milliliters per Liter of Final Solution |
|---|---|---|---|---|
| | 1 | 0.26 | 7.57 | 2 |
| | 3 | 0.77 | 22.71 | 6 |
| | 5 | 1.28 | 37.85 | 10 |
| | 10 | 2.56 | 75.71 | 20 |
| | 15 | 3.84 | 113.56 | 30 |
| | 25 | 6.40 | 189.27 | 50 |
| | 30 | 7.68 | 227.12 | 60 |
| | 50 | 12.80 | 378.54 | 100 |

| Drench | Dose (Milligrams per 6-in Pot) | Drench Volume per 6-in Pot* (Fluid Ounces) | ppm | Fluid Ounces per Gallon of Final Solution | Milliliters per Gallon of Final Solution | Milliliters per Liter of Final Solution |
|---|---|---|---|---|---|---|
| | 0.02 | 4 | 0.17 | 0.04 | 1.28 | 0.34 |
| | 0.03 | 4 | 0.25 | 0.06 | 1.92 | 0.51 |
| | 0.04 | 4 | 0.34 | 0.09 | 2.56 | 0.68 |
| | 0.05 | 4 | 0.42 | 0.11 | 3.20 | 0.85 |
| | 0.06 | 4 | 0.51 | 0.13 | 3.84 | 1.01 |
| | 0.09 | 4 | 0.76 | 0.19 | 5.76 | 1.52 |
| | 0.12 | 4 | 1.01 | 0.26 | 7.68 | 2.03 |
| | 0.20 | 4 | 1.69 | 0.43 | 12.80 | 3.38 |

* 2 fl oz/4-in pot; 3 fl oz/5-in pot; 10 fl oz/8-in pot.

**Table 23.** ***(Cont.)***

| Spray | Spray Solution (ppm) | Fluid Ounces per Gallon of Final Solution | Milliliters per Gallon of Final Solution | Milliliters per Liter of Final Solution |
|---|---|---|---|---|
| **FLOREL (3.9% active ingredient)** | | | | |
| | 300 | 0.97 | 28.72 | 7.59 |
| | 325 | 1.05 | 331.11 | 8.22 |
| | 500 | 1.62 | 47.86 | 12.64 |
| | 750 | 2.43 | 28.89 | 18.97 |
| | 975 | 3.16 | 93.34 | 24.66 |
| | 1,000 | 3.24 | 95.73 | 25.29 |
| **PRO-GIBB (4% active ingredient)** | | | | |
| | 2.5 | 0.008 | 0.24 | 0.06 |
| | 5.0 | 0.016 | 0.47 | 0.13 |
| | 100.0 | 0.320 | 9.46 | 2.50 |
| | 250.0 | 0.800 | 23.66 | 6.25 |
| | 300.0 | 0.960 | 28.39 | 7.50 |
| | 500.0 | 1.600 | 47.31 | 12.50 |
| **FASCINATION** | | | | |
| | 1/1 | 0.007 | 0.2 | 0.06 |
| | 5/5 | 0.04 | 1.1 | 0.3 |
| | 10/10 | 0.07 | 2.1 | 0.6 |
| | 25/25 | 0.18 | 5.3 | 1.4 |
| | 50/50 | 0.36 | 10.5 | 2.8 |
| | 75/75 | 0.53 | 15.8 | 4.2 |
| | 100/100 | 0.71 | 21.0 | 5.5 |

[1] Adapted from Hammer, P.A. 1992.

**Tables 24 through 25** are designed to assist growers who desire to prepare their own substrate mix.

**Table 24. Pre-plant fertilizer sources and rates of application [1,2]**

| | Rate per cubic yard (per $m^3$) | |
|---|---|---|
| **Nutrient source** | **Soil-based media** | **Soilless media** |
| **To provide calcium and magnesium** | | |
| When a pH rise is desired: | | |
| Dolomitic limestone | 0-10 lbs (0.6 kg) | 10 lbs (6 kg) |
| When no pH shift is desired: | | |
| Gypsum for calcium | 0-5 lbs (0.3 kg) | 0-5 lbs (0.3 kg) |
| Epsom salt for magnesium | 0-1 lbs (0-0.6 kg) | 0-1 lb (0-0.6 kg) |
| **To provide phosphorus[3]** | | |
| Superphosphate (0-45-0), or | 1.5 lb (0.9 kg) | 2.25 lbs (1.3 k.) |
| **To provide sulfur** | | |
| Gypsum (calcium sulfate) | 1.5 lbs (0.9 kg) | 1.5 lbs (0.9 kg) |
| **To provide micronutrients: iron, manganese, zinc, copper, boron, molybdenum** | | |
| Esmigran | 3-6 lbs (1.8-3.6 kg) | 3-6 lbs (1.8-3.6 kg) |
| Micromax | 1-1.5 lbs (0.6-0.9 kg) | 1-1.5 lb (0.6-0.9 kg) |
| Promax | 1-1.5 lbs (0.6-0.9 kg) | 1-1.5 lb (0.6-0.9 kg) |
| F-555HF | 3 oz (112 g) | 3 oz (112 g) |
| F-111HR | 1 lb (0.6 kg) | 1 lb (0.6 kg) |
| **To provide nitrogen and potassium (optional)** | | |
| Calcium nitrate, or | 1 lb (0.6 kg) | 1 lb (0.6 kg) |
| Potassium nitrate | 1 lb (0.6 kg) | 1 lb (0.6 kg) |

[1] From Nelson, P.V. 1998. *Greenhouse Operations and Management, 5th ed.* Published by Prentice Hall, Inc. Reprinted with permission.

[2] Rates in this table are for crops other than seedlings. Only limestone is necessary in seedling substrates. Optional nutrient sources for seedling substrate include up to 1 lb (0.6 kg) each of superphosphate, gypsum, and calcium nitrate; no potassium nitrate; and the low end of the rate range for micronutrients.

[3] These are maximum rates designed to supply phosphorus for three to four months if pH is maintained in a desirable range for the crop and the leaching percentage is at or below 20 percent.

**Table 25. Cornell Peat-Lite Mix A for seedlings, bedding plants and potted plants***

| Materials Used | Amount per Cubic Yard[1] | Amount per Bushel |
|---|---|---|
| Spagnum peat moss | 0.5 cubic yard (13 bushels) | 0.5 bushel |
| Horticultural grade vermiculite #2 size for seed germination #2 or 3 for transplanting | 0.5 cubic yard (13 bushels) | 0.5 bushel |
| Superphosphate | 1 to 2 pounds | 20.5 to 41.0 grams (1 to 2 tablespoons) |
| or Treble superphosphate[2] | 0.5 to 1 pound | 10.3 to 20.5 grams (0.6 to 1.2 tablespoons) |
| Ground dolomitic limestone[2] | 5 to 10 pounds | 103 to 206 grams (5.2 to 10.4 tablespoons) |
| Gypsum[2] | 2.0 pounds | 41 grams (2.5 tablespoons) |
| Calcium nitrate | 0.5 pound | 10 grams (1.2 tablespoons) |
| Potassium nitrate | 0.5 pound | 10 grams (1.2 tablespoons) |
| **Trace element material (Use Only One)** | | |
| Esmigran, or | 4.0 pounds | 81 grams (4.0 tablespoons) |
| Micromax | 1.5 pounds | 31 grams (1.7 tablespoons) |
| **Wetting agent (Use Only One[3])** | | |
| Aqua-Gro 2000 granular or | 1.0 pound | ---- |
| Aqua-Gro 2000-L liquid[4] | 3-5 fluid ounces | 0.5 level teaspoon |
| PsiMatric liquid[5] | 2-4 fluid ounces | 0.5 level teaspoon |

[1] A cubic yard equals 27 cubic feet or approximately 22 bushels. A 15 to 20 percent shrink occurs in mixing. Therefore, an additional 5 cubic feet or 4 bushels are used to obtain a full cubic yard.

[2] If treble superphosphate is used, gypsum is added to supply sulphur. If only 5 pounds of limestone are used for pH control, then add the gypsum that supplied calcium and sulphur.

[3] The granular Aqua-Grow is preferred.

[4] 3 ounces/yard for germination/seedlings, 5 ounces/yard for bedding plants and pot plants.

[5] 2 ounces/yard for germination/seedlings, 4 ounces/yard for bedding plants and pot plants.

* Adapted from Fonteno. W.C. 1994

**Table 26. Number of pots and flats that can be filled from 1 ft³ of soil mix**

| Pot Size (in) | Approximate Dimension Top x Depth x Bottom (in) | Number of Pots/ft³ |
|---|---|---|
| **Standard Round Pots** | | |
| 2¼ | 2¼ x 2 1/16 x 1¾ | 256 |
| 2½ | 2⅜ x 2¼ x 2 | 208 |
| 3 | 3 x 2 13/16 x 2¼ | 120 |
| 3½ | 3⅜ x 3 3/10 x 2⅜ | 80 |
| 4 | 4 x 3⅞ x 2¾ | 48 |
| 4½ | 4⅜ x 4⅜ x 3 | 40 |
| 5 | 5 x 3½ x 4 | 28 |
| 5½ | 5½ x 5⅜ x 3 13/16 | 20 |
| 6 | 6 x 5¾ x 4 1/16 | 16 |
| 7 | 6¾ x 7¾ x 4 11/16 | 10 |
| 8 | 7⅝ x 7¾ x 5⅜ | 6 |
| 10 | 9⅞ x 9¾ x 6⅞ | 3 |
| **Azalea Pots** | | |
| 4 | 4 x 21 3/16 x 3 | 56 |
| 4½ | 4½ x 3⅜ x 3¼ | 44 |
| 5 | 5 x 3 13/16 x 3 9/16 | 28 |
| 5½ | 5½ x 4¼ x 3⅞ | 24 |
| 6 | 6 x 4⅝ x 4¼ | 18 |
| 6½ | 6½ x 5 x 4 9/16 | 16 |
| 76 | ⅞ x 5⅜ x 5 1/16 | 12 |
| 7½ | 7⅜ x 5 11/16 x 5⅜ | 10 |
| 8 | 8⅛ x 5⅞ x 6 | 7 |
| 8½ | 8⅛ x 6¼ x 6¼ | 6 |
| 10 | 9⅞ x 7⅜ x 7¼ | 4 |
| **Square Pots** | | |
| 2¼ | 15/16 x 1⅞ x 1½ | 357 |
| 2½ | 2⅜ x 1 15/16 x 1⅞ | 224 |
| 3 | 2¾ x 2¼ x 2⅛ | |
| 3½ | 3¼ x 2¾ x 2½ | |
| 4 | 3⅝ x 3⅛ x 2⅞ | |
| 4½ | 4⅛ x 3⅝ x 3¼ | |
| **Bulb Pans** | | |
| 6 | 6 1/16 x 3 9/16 x 4 9/16 | 24 |
| 7 | 7 1/16 x 3 13/16 x 5 9/16 | 16 |
| 10 | 10¼ x 4 15/16 x 8⅛ | 5 |
| 12 | 12⅛ x 6 x 9¾ | 3 |

| Type | Approximate Dimension Top x Depth x Bottom (in) | Units/ft³ |
|---|---|---|
| **Flats** | | |
| Germination tray | 11½ x 21¼ x 1⅛ | 7.0 |
| 20-row Seeding tray | 11½ x 21¼ x 1⅛ | 11.0 |
| **Standard Cell-Packs** | | |
| 8-4 cell packs per tray | | 5.4 |
| 8-6 cell packs per tray | | 5.9 |
| 10-4 cell packs per tray | | 6.2 |
| 10-6 cell packs per tray | | 6.7 |
| 12-4 cell packs per tray | | 6.0 |
| 12-6 cell packs per tray | | 7.0 |
| Standard size 11¼ x 21¼ x 2½ | | |
| **Plug Flats** | | |
| 50 sq. flat | 1⅞ x 2¼ | 6.3 |
| 72 rd. flat | 1 7/16 x 1¾ | 12.8 |
| 72 sq. flat | 1 9/16 x 2 3/16 | 7.3 |
| 98 sq. flat | 1 5/16 x 2 | 7.9 |
| 128 sq. flat | 1 3/16 x 1 13/16 | 9.0 |
| 162 sq. flat | 1 x 1½ | 9.2 |
| 200 sq. flat | 5/16 x 1½ | 10.7 |
| 273 sq. flat | ¾ x 1⅛ | 18.6 |
| 288 rd. flat | 13/16 x 1 | 19.1 |
| 288 sq. flat | 13/16 x 1¼ | 15.0 |
| 392 sq. flat | ⅝ x ⅞ | 23.1 |
| 406 sq. flat | ⅝ x ⅞ | 22.2 |
| 512 sq. flat | 9/16 x ¾ | 24.7 |
| **Nursery Containers (plastic)** | | |
| 1 gal | 6½ x 6½ | 10.0 |
| 2 gal | 8½ x 8½ | 4.5 |
| 3 gal | 10¼ x 9⅝ | 3.3 |
| **Saucerless** | | |
| 8 | | 9.7 |
| 0 | | 5.3 |
| 2 | | 3.1 |
| **Hanging Baskets** | | |
| 6 | 6 x 4½ 3¼ | 29 |
| 8 | 7 ½ x 4⅞ x 4 1/16 | 11 |
| 10 | 10 x 6⅛ x 4 | 5 |

**Table 26.** ***(Continued)***

| Geranium Pots | | |
|---|---|---|
| 3½ | 3¼ x 3 x 2⅜ | 96 |
| 4 | $3^{15}/_{16}$ x $3^{7}/_{16}$ x 2⅞ | 56 |
| 4¼ | 4¼ x $3^{9}/_{16}$ x 3⅛ | 50 |
| 4½ | 4⅜ x 3⅞ x 3 | 44 |

**NOTES:** Sources – Eason Horticultural Resources, Inc., Crestview Hills, KY, and Hummert's Helpful Hints, 1999-2000 edition.
These figures have to be treated as approximations. Actual pot dimensions will vary from one manufacturer to another. Based on volume of pots when filled level to rim with loose, unpacked soil mix.

**Table 27. Number of nursery containers that can be filled from 1 $yd^3$ of soil mix[1]**

| Size | # / per $yd^3$ |
|---|---|
| Trade 1 | 300 |
| Full 1 | 200 |
| 2 | 140 |
| 3 | 80 |
| 5 | 50 |
| 7 | 35 |
| 10 | 20 |
| 15 | 14 |
| 25 | 8 |
| 45 | 4 |

[1] Source: Ruter, J. (pers. communication)

**Soil Mix Volumes**
1 bushel = 1 ¼ cu. ft.
1 cu. yard = 27 cu. ft.
1 cu. yard = 22 bushels
100 sq. ft. of bench area (at 6 in. soil depth) = 50 cu. ft. or 40 bushels of soil mix.

**Table 28. Coverage estimates for perlite, peat, topsoil and straw**

| Thickness | 4 cu ft Perlite | 6 cu ft Canadian Peat (compressed) (12 cu ft loose) | 1 cu yd* Peat Mulches, Topsoil, etc. | 1 Bale Pinestraw | 1 Bale Wheatstraw |
|---|---|---|---|---|---|
| 2 in | 28 sq ft | 72 sq ft | 162 sq ft | 90 sq ft | 180 sq ft |
| 1 in | 48 sq ft | 144 sq ft | 324 sq ft | 180 sq ft | 360 sq ft |
| ½ in | 96 sq ft | 288 sq ft | 648 sq ft | 360 sq ft | 720 sq ft |
| ¼ in | 192 sq ft | 576 sq ft | 1296 sq ft | 720 sq ft | 1440 sq ft |

* 1 cubic yard ($yd^3$) = 27 cubic feet ($ft^3$)

**Tables 29 through 30** help determine correct spacing and number of plants at each spacing for both greenhouse and field situations.

**Table 29. Plant spacing guide (greenhouse)**

| Spacing | Plants/sq ft | Plants/A of production area | Plants/A of ground covered* |
|---|---|---|---|
| 8" x 9" | 2.0 | 87,000 | 58,000 |
| 8" x 8" | 2.3 | 98,000 | 65,000 |
| 8" x 7" | 2.6 | 114,000 | 76,000 |
| 8" x 6" | 3.0 | 30,000 | 87,000 |
| 6" x 7" | 3.4 | 147,000 | 98,000 |
| 6" x 6" | 4.0 | 174,000 | 116,000 |
| 6" x 5" | 4.8 | 208,000 | 139,000 |
| 5" x 5" | 5.8 | 252,000 | 168,000 |
| 5" x 4" | 7.2 | 313,000 | 209,000 |
| 5" x 3" | 9.6 | 418,000 | 279,000 |
| 4" x 3" | 12.0 | 522,000 | 348,000 |

* Assuming 1/3 of production area devoted to aisles, etc.

**Table 30. Plant spacing guide (field/orchard) [1]**

| | Spacing Between Plants Within the Row | | | | | | | | | | |
|---|---|---|---|---|---|---|---|---|---|---|---|
| **Feet** | **6** | **8** | **10** | **12** | **14** | **16** | **18** | **20** | **22** | **24** | **26** |
| **4** | 1815 | 1361 | 1089 | 907 | 777 | 680 | 605 | 544 | 495 | 453 | 418 |
| **6** | 1218 | 907 | 726 | 605 | 518 | 453 | 403 | 363 | 330 | 302 | 279 |
| **8** | 907 | 680 | 544 | 453 | 388 | 339 | 302 | 272 | 247 | 226 | 209 |
| **10** | 726 | 544 | 435 | 362 | 311 | 272 | 242 | 218 | 207 | 181 | 167 |
| **12** | 605 | 453 | 362 | 302 | 259 | 226 | 201 | 181 | 165 | 151 | 139 |
| **14** | 518 | 388 | 311 | 259 | 222 | 194 | 172 | 155 | 141 | 129 | 119 |
| **16** | 453 | 339 | 272 | 226 | 194 | 169 | 151 | 136 | 123 | 113 | 104 |
| **18** | 403 | 302 | 242 | 201 | 172 | 151 | 134 | 121 | 110 | 100 | 93 |
| **20** | 363 | 272 | 218 | 181 | 155 | 136 | 121 | 108 | 99 | 90 | 83 |
| **22** | 330 | 247 | 207 | 165 | 141 | 123 | 110 | 99 | 90 | 82 | 76 |
| **24** | 302 | 226 | 181 | 151 | 129 | 113 | 100 | 90 | 82 | 75 | 69 |
| **26** | 279 | 209 | 167 | 139 | 119 | 104 | 93 | 83 | 76 | 69 | 64 |

**Spacing Between Rows of Plants**

**Number of Plants per Acre**

[1] To determine the number of plants per acre for spacing not given in the table, multiply the distance in the row by the distance between rows and divide that number into 43,560.

# Landscape

**Tables 31 through 36** are designed to aid landscape professionals and homeowners in determining number of plants at various spacing, cubic yards of soil needed at various depths and areas, areas covered in square feet at various depths, time needed to trim lawns, and the volume of water delivered as affected by the size of irrigation hose.

**Table 31. Estimated number of plants to fill 100 ft$^2$ of bed area for square (row) and triangular (equilateral) planting patterns using 4- to 14-inch spacing distances[1]**

| Planting Pattern | Inches between rows of plants (Y) | Inches between plants (X) within rows | Estimated number of plants per 100 ft$^2$ |
|---|---|---|---|
| **Square** | | | |
| For square spacing, the distance between plants within rows (x) equals the distance between rows (Y) 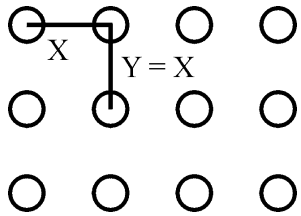  | 4 | 4 | 900 |
| | 6 | 6 | 400 |
| | 8 | 8 | 225 |
| | 10 | 10 | 144 |
| | 12 | 12 | 100 |
| | 14 | 14 | 74 |
| **Triangular** | | | |
| For triangular spacing, the distance between plants within rows and between rows both equal X, and the distance between rows (Y) equals 0.886 X. 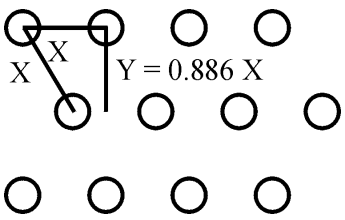  | 3.46 | 4 | 1039 |
| | 5.20 | 6 | 462 |
| | 6.93 | 8 | 260 |
| | 8.66 | 10 | 166 |
| | 10.39 | 12 | 115 |
| | 12.12 | 14 | 85 |

[1] Adopted from Bailey, D.A., and M.A. Powell. 1999.

| Table 32. Volume of water delivered – by size of hose | | | | | | | |
|---|---|---|---|---|---|---|---|
| Water Pressure (lbs) | *(Gallons per Minute in Bold Face)* **Hose Diameter** | | | | | | |
| | **3/8"** | **13/32"** | **7/16"** | **1/2"** | **9/16"** | **3/4"** | **5/8"** |
| **30** | 2.6 | 3.2 | 3.8 | 5.3 | 7.2 | 9.3 | 14.5 |
| **40** | 3.5 | 4.2 | 5.0 | 7.0 | 9.4 | 12.2 | 19.0 |
| **50** | 4.3 | 5.2 | 6.3 | 8.8 | 11.8 | 15.3 | 24.0 |
| **60** | 5.2 | 6.2 | 7.5 | 10.5 | 14.1 | 18.3 | 28.5 |
| **70** | 6.0 | 7.3 | 8.7 | 12.2 | 16.2 | 21.0 | 32.7 |
| **80** | 6.8 | 8.3 | 9.9 | 13.9 | 18.5 | 24.0 | 37.3 |
| NOTE: Table based on 50-foot hose length; for 25 feet, multiply by 1.40; for 75 feet, multiply by 0.80. | | | | | | | |

| Table 33. Number of plants per acre at various spacing | | | | | |
|---|---|---|---|---|---|
| **Distance Apart** | **No. of Plants** | **Distance Apart** | **No. of Plants** | **Distance Apart** | **No. of Plants** |
| **3 x 3 inches** | 696,690 | **4 x 4 feet** | 2,722 | **13 x 13 feet** | 257 |
| **4 x 4 inches** | 392,040 | **4½ x 4½ feet** | 2,151 | **14 x 14 feet** | 222 |
| **6 x 6 inches** | 174,240 | **5 x 1 feet** | 8,712 | **15 x 15 feet** | 193 |
| **9 x 9 inches** | 77,440 | **5 x 2 feet** | 4,356 | **16 x 16 feet** | 170 |
| **1 x 1 foot** | 43,560 | **5 x 3 feet** | 2,904 | **16½ x 16½ feet** | 160 |
| **1½ x 1½ feet** | 19,360 | **5 x 4 feet** | 2,178 | **17 x 17 feet** | 150 |
| **2 x 1 feet** | 21,780 | **5 x 5 feet** | 1,742 | **18 x 18 feet** | 134 |
| **2 x 2 feet** | 10,890 | **5½ x 5½ feet** | 1,417 | **19 x 19 feet** | 120 |
| **2½ x 2½ feet** | 6,960 | **6 x 6 feet** | 1,210 | **20 x 20 feet** | 108 |
| **3 x 1 feet** | 14,620 | **6½ x 6½ feet** | 1,031 | **25 x 25 feet** | 69 |
| **3 x 2 feet** | 7,260 | **7 x 7 feet** | 881 | **30 x 30 feet** | 48 |
| **3 x 3 feet** | 4,840 | **8 x 8 feet** | 680 | **33 x 33 feet** | 40 |
| **3½ x 3½ feet** | 3,555 | **9 x 9 feet** | 537 | **40 x 40 feet** | 27 |
| **4 x 1 feet** | 10,890 | **10 x 10 feet** | 435 | **50 x 50 feet** | 17 |
| **4 x 2 feet** | 5,445 | **11 x 11 feet** | 360 | **60 x 60 feet** | 12 |
| **4 x 3 feet** | 3,630 | **12 x 12 feet** | 302 | **66 x 66 feet** | 10 |

**Table 34. Times required to mow or trim lawn areas**

**In Minutes Per 1000 Square Feet - Or - Minutes Per Acre (Numbers Rounded Up To The Nearest Minute)**

| **Speed Is** | | **And Width of Cut**Is** | | | | | | | |
|---|---|---|---|---|---|---|---|---|---|
| Miles Per Hour | Feet Per Minute | 6" | 12" | 18" | 24" | 36" | 48" | 60" | 72" |
| .25 | 22 | 91 | 46 | 31 | 23 | 16 | 12 | 10 | 8 |
| .5 | 44 | 46 | 23 | 16 | 12 | 8 | 6 | 5 | 4 |
| 1.0 | 88 | 23 | 12 | 8 | 6 | 4 | 3 | 3 | 2 |
| 1.25 | 110 | 19 | 10 | 7 | 5 | 4 | 3 | 2 | 66 |
| 1.50 | 132 | 16 | 8 | 6 | 4 | 3 | 2 | 66 | 55 |
| 1.75 | 154 | 13 | 7 | 5 | 4 | 3 | 71 | 57 | 48 |
| 2.0 | 176 | 12 | 6 | 4 | 3 | 2 | 62 | 50 | 42 |
| 2.5 | 220 | 10 | 5 | 3 | 3 | 66 | 50 | 40 | 33 |
| 3.0 | 264 | 8 | 4 | 3 | 83 | 55 | 42 | 33 | 28 |
| 3.5 | 308 | 7 | 4 | 95 | 71 | 48 | 36 | 29 | 24 |
| 4.0 | 352 | 6 | 3 | 83 | 62 | 42 | 31 | 25 | 21 |
| 4.5 | 396 | 6 | 110 | 74 | 55 | 37 | 28 | 22 | 19 |
| 5.0 | 440 | 198 | 99 | 66 | 50 | 33 | 25 | 20 | 17 |
| 5.5 | 484 | 180 | 90 | 60 | 45 | 30 | 23 | 18 | 15 |
| 6.0 | 528 | 165 | 83 | 55 | 42 | 28 | 21 | 17 | 14 |
| 8.0 | 704 | 124 | 62 | 42 | 31 | 21 | 16 | 13 | 11 |

*Time=Min./1000 sq. ft. above this Line

*Time=Min./Acre below this Line

**These figures are for effective width of cut, that is, width of blade less operational overlap averages = 4" to 10"

**Some Average Speeds**

| | |
|---|---|
| Slow Walk - Pushing Mower | 150'/Min. |
| Slow Walk | 200'/Min. |
| Fast Pushing Mower | 250'/Min. |
| Modest Riding Yard Mower | 275'/Min. |
| Fast Brisk Walk | 300'/Min. |
| Good Riding Yard Mower | 300'-350'/Min. |
| Tractor-Towed Riding Mower | 6-7 M.P.H. |

1 Acre = 43,560 sq ft; 1 mile = 5,280 lin ft

**Table 35. Cubic yards of soil needed at various depths and areas**

| Depth in Inches | Areas in 1,000 Sq. Ft. and Acres | | | | | | | | | | | | | | |
|---|---|---|---|---|---|---|---|---|---|---|---|---|---|---|---|
| | ½ | 1 | 2 | 3 | 4 | 5 | 6 | 7 | 8 | 9 | 10 | ½A | 1A | 2A |
| 1 | 2 | 3 | 6 | 9 | 12 | 15 | 17 | 22 | 25 | 28 | 31 | 67 | 134 | 269 |
| 2 | 3 | 6 | 12 | 19 | 25 | 31 | 37 | 43 | 49 | 56 | 62 | 134 | 269 | 538 |
| 3 | 5 | 9 | 19 | 28 | 37 | 46 | 56 | 65 | 74 | 83 | 93 | 202 | 403 | 807 |
| 4 | 6 | 12 | 25 | 37 | 49 | 62 | 74 | 86 | 99 | 111 | 124 | 269 | 538 | 1076 |
| 5 | 8 | 15 | 31 | 46 | 62 | 77 | 93 | 108 | 124 | 139 | 154 | 336 | 672 | 1344 |
| 6 | 9 | 19 | 37 | 56 | 74 | 93 | 111 | 130 | 148 | 167 | 185 | 403 | 807 | 1613 |
| 7 | 11 | 22 | 43 | 65 | 86 | 108 | 130 | 151 | 173 | 194 | 216 | 471 | 941 | 1882 |
| 8 | 12 | 25 | 49 | 71 | 99 | 124 | 148 | 173 | 198 | 222 | 247 | 538 | 1076 | 2151 |
| 9 | 14 | 28 | 56 | 83 | 111 | 139 | 167 | 194 | 222 | 250 | 278 | 605 | 1210 | 2420 |
| 10 | 15 | 31 | 62 | 93 | 124 | 154 | 185 | 216 | 247 | 278 | 309 | 672 | 1344 | 2688 |
| 11 | 17 | 34 | 68 | 102 | 136 | 170 | 203 | 238 | 272 | 306 | 340 | 739 | 1479 | 2858 |
| 12 | 19 | 37 | 74 | 111 | 148 | 185 | 222 | 259 | 296 | 333 | 370 | 807 | 1613 | 3227 |

**Table 36. Areas covered in square feet at various depths**

| Depth in Cu. Yds. | Depth in Inches | | | | | |
|---|---|---|---|---|---|---|
| | 1 | 2 | 3 | 4 | 5 | 6 |
| 1 | 324 | 162 | 108 | 81 | 65 | 54 |
| 2 | 648 | 324 | 216 | 162 | 130 | 108 |
| 3 | 972 | 486 | 324 | 243 | 195 | 162 |
| 4 | 1296 | 648 | 432 | 324 | 260 | 216 |
| 5 | 1620 | 810 | 540 | 405 | 324 | 270 |
| 6 | 1944 | 972 | 648 | 486 | 390 | 324 |
| 7 | 2268 | 1134 | 756 | 567 | 455 | 378 |
| 8 | 2592 | 1296 | 864 | 648 | 520 | 432 |

Table 37 deals with temperature conversion.

**Table 37. Temperature conversion**

| Fahrenheit ⇨ | Centigrade (Celsius) | Centigrade (Celsius) ⇨ | Fahrenheit |
|---|---|---|---|
| 0 | -17.8 | -30 | -22.0 |
| 5 | -15.0 | -25 | -13.0 |
| 10 | -12.2 | -20 | -4.0 |
| 15 | -9.4 | -15 | 5.0 |
| 20 | -6.7 | -10 | 14.0 |
| 25 | -3.9 | -5 | 23.0 |
| 30 | -1.1 | 0 | 32.0 |
| 35 | 1.7 | 5 | 41.0 |
| 40 | 4.4 | 10 | 50.0 |
| 45 | 7.2 | 15 | 59.0 |
| 50 | 10.0 | 20 | 68.0 |
| 55 | 12.8 | 25 | 77.0 |
| 60 | 15.6 | 30 | 86.0 |
| 65 | 18.3 | 35 | 95.0 |
| 70 | 21.1 | 40 | 104.4 |
| 75 | 23.9 | 45 | 113.0 |
| 80 | 26.7 | 50 | 122.0 |
| 85 | 29.4 | 55 | 131.0 |
| 90 | 32.2 | 60 | 140.0 |
| 95 | 35.0 | 80 | 176.0 |
| 100 | 37.8 | 100 | 212.0 |

**NOTES:** 1) To convert temperature in degrees from Centigrade (Celsius) to temperature in degrees Fahrenheit: Multiply Centigrade temperature by **1.8** and add **32**. 2) To convert temperature in degrees Fahrenheit to temperature in degrees Centigrade (Celsius): Subtract **32** and multiply by **0.55**.

**Formulas for calculating greenhouse volumes**
**These formulas are helpful in determining heating and cooling costs for greenhouses.**

*Figure 1-A.* Formula for calculating uneven-span greenhouse volume.

L = length
W = width
$W_1$ = width of short span
$W_2$ = width of long span
$H_e$ = height from floor to eave
$H_r$ = height from eave to top

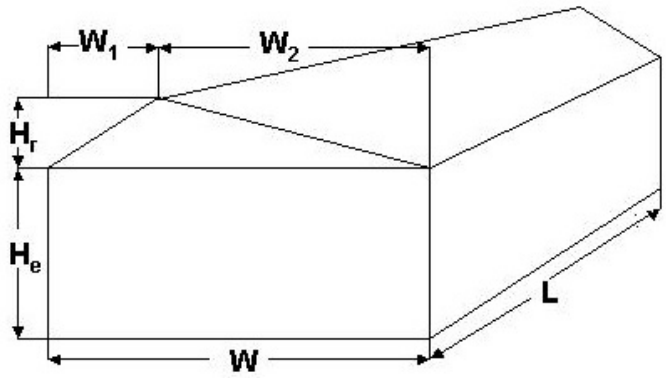


**Greenhouse volume in cubic feet = $[(H_e \times W) + (W_1 \times H_r)/2 + (W_2 \times H_r)/2] \times L$**

*Figure 1-B.* Formula for calculating even-span greenhouse volume.

L = length
W = width
$H_e$ = height from floor to eave
$H_r$ = height from eave to top

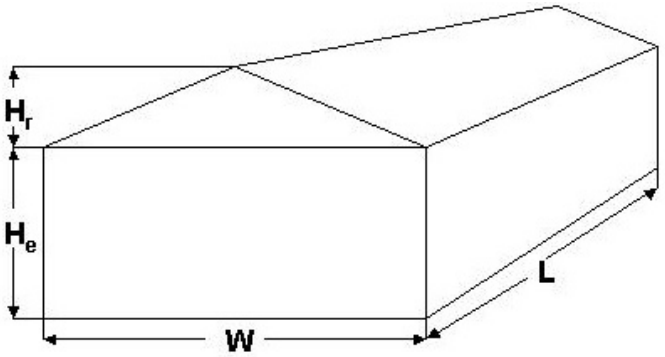


**Greenhouse volume in cubic feet = $[(H_e \times W) + (W \times H_r)/2] \times L$**

*Figure 1-C.* Formula for calculating quonset greenhouse volume.

L = length
W = width
$H_e$ = height form floor to eave
$H_r$ = height from eave to top

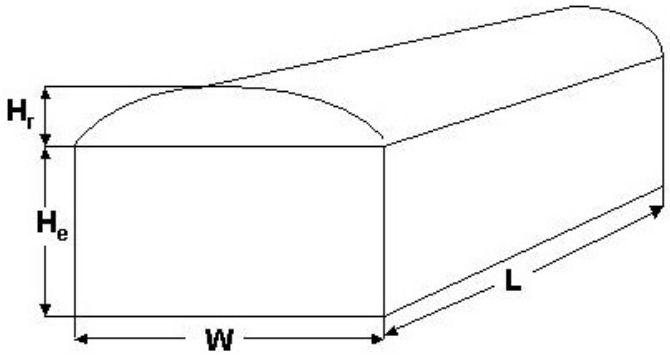

**Formula for calculating the surface area of the gable end, which is an arc segment.**

A = arc length of the roof
R = radius of circle of which a is the arc segment
$\alpha$ = the angle forming the arc segment

R = c
$c = b + H_r$
$a^2 + b^2 = c^2$
tan ***A*** = a/b

Examples: $H_r$ = 4', W = 20'
R = c
C = b + 4'
a = 10'
$(10)^2 + b^2 = (b + 4)^2$
b = 10.5
c = 10.5 + 4 = 14.5' = R

***A*** = $(\pi \times R \times \alpha)/180^\circ$
tan ***A*** = 10/10.5
tan ***A*** = 0.9524
arctan 0.9524 = 43.6°
$\alpha = 2 \times A = 2 \times 43.6^\circ = 87.2^\circ$

A = $(\pi \times R \times \alpha)/180^\circ$
A = $(3.14159 \times 14.5 \times 887.2)/180^\circ$
A = 22'6"

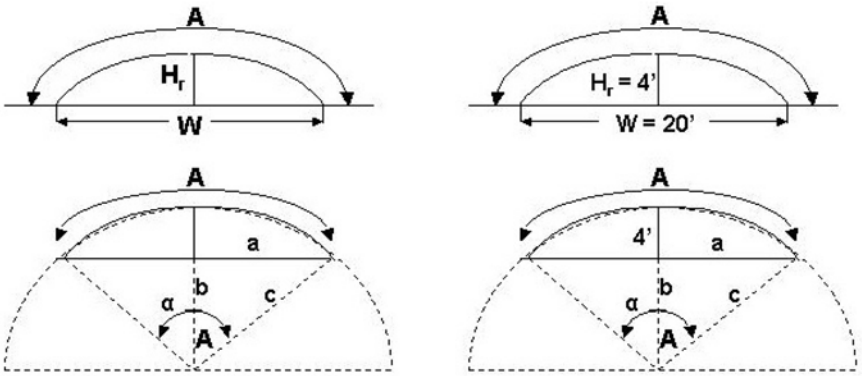


Area of an arc segment = (A x R)/2
Area = 22.6 x 14.5)/2 = 164 $ft^2$

But we do not need the area of the entire arc segment, only the area actually present on the greenhouse; so we need to SUBTRACT OFF the bottom triangles:

Area of a triangle = ½ (width x height) = a x b = 10 x 10.5 = 105 $ft^2$
So the area of one gable end = 164 $ft^2$ - 105 ft2 = 59 $ft^2$

**Volume (above eaves) is area of gable multiplied by the length of the greenhouse. Greenhouse volume in cubic feet = ($H_e$ x W x L) + (Volume above eaves).**

**Formulas for calculating variously-shaped areas**
**These formulas are helpful in determining application rates for areas with specific shapes. Knowledge of the areas is also helpful in estimating amounts of various soil amendments and number of plants needed.**

*Figure 2-A.* Square or rectangle

Area = Length x Width
Area = L x W
Area = (50') x (50')
Area = 2,500 sq ft

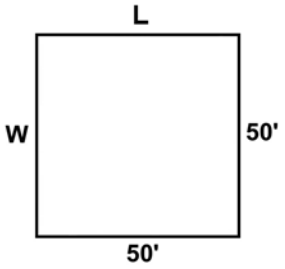


Figure 2-B. Triangle

Area = ½ x Base x Height
Area = ½ x B x H
Area = ½ x (50') x (75')
Area = 1,875 sq ft

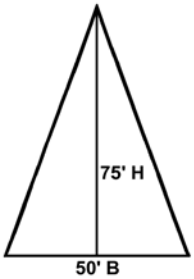


Figure 2-C. Circle

Area = π x Radius x Radius
Area = π x $R^2$ = 22/7 (3.14)
Area = 3.14 x 20' x 20'
Area = 1,256 sq ft

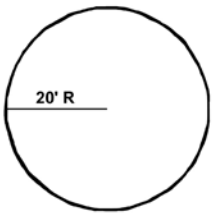

Figure 2-D. Circle (within 5% accuracy)

Area = Diameter x Diameter x 0.8
Area = 0.8 x $D^2$
Area = 0.8 x 40' x 40'
Area = 1,280 sq ft

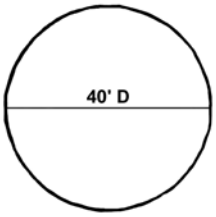


Figure 2-E. Ovals or egg-shaped (within 5% accuracy)

Area = Length x Width at midpoint x 0.8
Area = 0.8 x LW
Area = 0.8 x 20' x 50'
Area = 800 sq ft

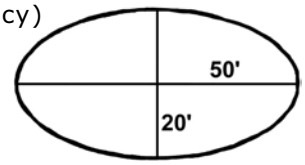


Figure 2-F. Irregular shapes (within 5% accuracy)

- Measure the longest axis of the area (length line).
- At every 10 feet on the length line, measure the width at right angles to the length line.
- Total all widths and multiply by 10.

Area = (A + B + C + D + E + F) x 10
Area = (50' + 75' + 125' + 150' + 75' + 25') x 10
Area = 500 x 10
Area = 5,000 sq ft

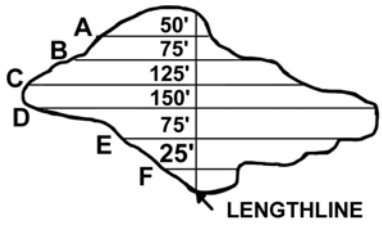


Figure 2-G. Unusual-shaped areas

Calculation should be made for various sections.
In this case, calculate and add together:
Area of triangle
Area of rectangle
½ Area of circle
Total area = total sq ft of area

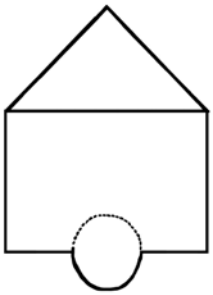

**DISCLAIMER: Trade Named Products listed does not imply endorsement over similar products, which may also be available.**

# Acknowledgments

The authors wish to acknowledge the following sources, certain tables from which were adapted to use in this publication.

- Ball RedBook, 16 ed. 1998. Vic Ball (Ed.) Ball Publishing.
- *Bedding Plants IV.* 1994. J. Holcomb (Ed.) Ball Publishing.
- Cornell Recommendations for Commercial Floricultural Crops, Part 1. Cultural Practices and Production Programs.
- *Greenhouse Operation and Management*, 5th ed. 1998. P. V. Nelson.
- *Hummert's Helphul Hints*, 1999-2000 ed. Hummert International.
- *Installation and Maintenance of Landscape Plants Bedding Plants*. D.A. Bailey and M.A. Powell. 1999. North Carolina State University A&T State University Cooperative Extension. Horticulture Information Leaflet 555.
- *Light and fertilizer recommendations for production of acclimatized potted foliage plants*. C.A. Conover and R.T. Poole, 1984, Foliage Digest (vii) 6: 1-6.
- *Greenhouse Media Lab Acid Addition Calculator to Control Alkalinity in Irrigation Water .*B.E. Whipker, D.A. Bailey, P.V. Nelson, W.C. Fonteno, and P.A. Hammer. Cooperative Extension Services of the Northeast States.
- *Nutrition of Greenhouse Crops, pH and EC Meters – Tools for Substrate Analysis*. 2000. T.J. Cavins, J.L. Gibson, B.E. Whipker, and W.C. Fonteno. North Carolina State University Research Report. Florex.001.
- *Tips on Growing Bedding Plants*, 4th ed. 1999. O.F.A. Services Inc.
- *Tips on the Use of Chemical Growth Regulators on Floriculture Crops.* 1992. O.F.A. Services Inc.
- *Tons to Teaspoons*, L2285, University of California Cooperative Extension Service.
- *Water, Media and Nutrition*. 1996. Alkalinity, pH and Acidification, Chapter 4. David Reed (Ed.) Ball Publishing.

Learning for Life

**Bulletin 931** **Reviewed April 2012**

The University of Georgia and Ft. Valley State University, the U.S. Department of Agriculture and counties of the state cooperating. Cooperative Extension, the University of Georgia College of Agricultural and Environmental Sciences, offers educational programs, assistance and materials to all people without regard to race, color, national origin, age, gender or disability.

**The University of Georgia is committed to principles of equal opportunity and affirmative action.**